Version 2.0
(January 2017)

Emergency Responder Health and Safety Manual

Chapter 5

Personal Protective Equipment Program

Final

Customized for Region 4 on April 13, 2020

U.S. Environmental Protection Agency

TABLE OF CONTENTS

LIST OF ACRONYMS iii

1.0 INTRODUCTION 1
- 1.1 Background Information and Regulatory Basis 1
- 1.2 Instructions for Users 2

2.0 ROLES AND RESPONSIBILITIES 2

3.0 PPE REQUIREMENTS 3
- 3.1 Onsite Medical Monitoring 3
- 3.2 PPE Training Requirements 3
- 3.3 PPE Inspection, Cleaning, Maintenance, and Storage 4
  - 3.3.1 PPE Inspection 4
  - 3.3.2 PPE Cleaning and Maintenance 5
  - 3.3.3 PPE Storage 5
  - 3.3.4 PPE Inspection and Maintenance Records 6
- 3.4 Fitting, Donning, and Doffing PPE 6
- 3.5 Controlling Hazards Associated with PPE Use 7

4.0 PPE SELECTION 8
- 4.1 Site Hazard Assessment 8
- 4.2 PPE Selection Procedures 11
- 4.3 EPA/OSHA PPE Levels of Protection 12
  - 4.3.1 Level A 13
  - 4.3.2 Level B 14
  - 4.3.3 Level C 16
  - 4.3.4 Level D 18
  - 4.3.5 PPE for CBRN Hazards 18
  - 4.3.6 PPE for Site-Work On or Near Water 19
- 4.4 Factors Impacting PPE Replacement 21

5.0 DECONTAMINATION OF PPE 21
- 5.1 Site-Specific Decontamination Plan 21
  - 5.1.2 Emergency Decontamination of PPE 22
  - 5.1.3 Protection of Decontamination Line Assistants 22
- 5.2 Site-Specific Decontamination Procedures 23
  - 5.2.1 Decontamination Procedures and Policies 23
  - 5.2.2 Procedures to Minimize PPE Contamination 24
- 5.3 Overview of PPE Decontamination Methods 24
  - 5.3.1 Physical Removal for Gross Decontamination 25
  - 5.3.2 Chemical Removal 25
- 5.4 Measuring Decontamination Effectiveness 26
- 5.5 Reuse of Decontaminated PPE 26
- 5.6 Decontamination Equipment 26
- 5.7 PPE Disposal 27

6.0 RECORDKEEPING 28

APPENDIX A Personal Protective Equipment Program: Designation of Roles and Responsibilities 1
APPENDIX B Personal Protective Equipment Program: Documentation of Additional Policies and Procedures 1
APPENDIX C Glossary 1
APPENDIX D PPE Training Sample Test Questions 1
APPENDIX E Sample Site Hazard Assessment and Certification for PPE Selection 1
APPENDIX F PPE Selection Procedures 1
APPENDIX G National Fire Protection Association (NFPA) Protective Clothing and Equipment Performance Standards and Ensembles 1
APPENDIX H Selection of Personal Protective Equipment for Response to Chemical, Biological, Radiological, and Nuclear Agents 1
APPENDIX I Calculating Allowable Exposures for Unusual Work Schedules 1
APPENDIX J Sample Decontamination and Doffing Procedures for Typical Levels A, B, and C 1
APPENDIX K Decontamination Solutions for Specific Chemical and Biological Hazards 1

LIST OF TABLES

Table 1 Suggested Levels of Protection Based on Air Monitoring 11
Table 2 Recommended Level A Ensemble Components 14
Table 3 Recommended Level B Ensemble Components 16
Table 4 Recommended Level C Ensemble Components 17
Table 5 Recommended Level D Ensemble Components 18
Table 6 Ensemble Selection for CBRN Hazards 19
Table 7 Flotation Characteristics of PFDs 20
Table 8 PFD Types and Uses 20
Table 9 PPE Record Retention Requirements 28

LIST OF ACRONYMS

ACGIH	American Conference of Governmental Industrial Hygienists
ANSI	American National Standards Institute
APR	Air-purifying respirator
CBRN	Chemical, biological, radiological, and nuclear (agents)
CFR	Code of Federal Regulations
CPC	Chemical protective clothing
CRZ	Contamination reduction zone
DOT	U.S. Department of Transportation
EMT	Emergency medical technician
EPA	U.S. Environmental Protection Agency
FRM	Field Readiness Module
HASP	Health and safety plan
HAZWOPER	Hazardous Waste Operations and Emergency Response
HQ	Headquarters
HSPC	Health and Safety Program Contact
IDLH	Immediately dangerous to life or health
MSDS	Material safety data sheet
NFPA	National Fire Protection Association
NIOSH	National Institute for Occupational Safety and Health
OLEM	Office of Land and Emergency Management (formerly called Office of Solid Waste and Emergency Response (OSWER))
OSC	On-Scene Coordinator
OSHA	Occupational Safety and Health Administration (U.S. Department of Labor)
PAH	Polycyclic aromatic hydrocarbons
PAPR	Powered air-purifying respirator
PEL	OSHA's permissible exposure limit
PFD	Personal flotation device
PPE	Personal protective equipment
ppm	Parts per million
REL	NIOSH's recommended exposure limit
SAR	Supplied-air respirator
SCBA	Self-contained breathing apparatus
SHEMP	Safety, Health, and Environmental Management Program
SOP	Standard operating procedure
SSD	Safety and Sustainability Division (formerly called Safety, Health and Environmental Management Division (SHEMD))
STEL	Short-term exposure limit
TIC	Toxic industrial chemicals
TLV	ACGIH's threshold limit value
USCG	United States Coast Guard

1.0 INTRODUCTION

1.1 Background Information and Regulatory Basis

EPA's emergency responders wear personal protective equipment (PPE) to reduce exposure to safety and health hazards. PPE includes hard hats, face shields, safety glasses, earplugs, respirators, chemical protective clothing, gloves, and safety shoes. Emergency responders may be required on occasion to enter a site before the hazards have been fully characterized. This means the use of appropriate PPE is critical to their protection. However, PPE is never 100 percent protective, and PPE use itself can pose risks, such as heat stress. **In most cases, PPE is the last line of defense against hazardous substances and safety and health hazards and must be used only after all other feasible control options, including engineering controls, work practices, and administrative controls, have been implemented.** During chemical, biological, radiological, and nuclear (CBRN) events, however, PPE must always be used.

This chapter describes EPA's PPE program for emergency responders and has been written to ensure compliance with the Occupational Safety and Health Administration's (OSHA's) Hazardous Waste Operations and Emergency Response (HAZWOPER), 29 CFR 1910.120, and other PPE requirements (see Text Box 1). HAZWOPER states that employers must maintain a written PPE program and that site-specific PPE procedures must be incorporated into all site-specific health and safety plans (HASPs).

Customizing this chapter, in accordance with the instructions provided in Section 1.2, will satisfy OSHA's requirements for an organization-level written PPE program. Additionally, the topics addressed in this chapter can be used to develop the PPE sections of a site-specific HASP. (Additional information on preparing a HASP is available in the Site-Specific HASP Development chapter of this manual.) Users should note that PPE elements are also discussed in other chapters of the manual, such as the Respiratory Protection Program chapter, the Physical Stress Management Program chapter (which covers hearing protection), and the Bloodborne Pathogen Exposure Control Plan.

Text Box 1
PPE Regulations and Consensus Standards

- 29 CFR 1910.120: HAZWOPER
- 29 CFR 1910 Subpart I, Personal Protective Equipment
  - — 29 CFR 1910.132: General requirements
  - — 29 CFR 1910.133: Eye and face protection
  - — 29 CFR 1910.134: Respiratory protection
  - — 29 CFR 1910.135: Head protection
  - — 29 CFR 1910.136: Occupational foot protection
  - — 29 CFR 1910.138: Hand protection
- 29 CFR 1910.95: Occupational noise exposure
- 29 CFR 1910 and 1926, Subpart Z, Toxic and Hazardous Substances
- 29 CFR 1960: Basic Program Elements for Federal Emergency Responders
- 40 CFR 311: Worker Protection
- ANSI Z87.1: Occupational and Educational Personal Eye and Face Protection Devices
- ANSI Z89.1: American National Standard for Industrial Head Protection
- ANSI Z41: American National Standard for Personal Protection—Protective Footwear
- ASTM F-2412: Standard Test Methods for Foot Protection
- ASTM F-2413: Standard Specification for Performance Requirements for Protective (Safety) Toe Cap Footwear

The PPE Program chapter provides requirements that all EPA organizations must meet to implement a PPE program for emergency responders. These minimum requirements have been established to ensure that:

- Emergency responders receive training on the selection, use, care, and decontamination of PPE, as well as the hazards associated with PPE use (see Section 3.2).

- Nationally consistent procedures are in place with regard to implementing a PPE program (see Sections 3.0 through 5.0).
- Nationally consistent recordkeeping practices are implemented (see Section 6.0).

The regulations listed in Text Box 1 represent minimum requirements. In addition to these requirements, the following guidance documents form the basis for the safe work practices and procedures adopted by EPA's emergency response program:

- Safety, Health and Environmental Management Program Guideline No.44, Personal Protective Equipment, U.S. EPA Safety, Health and Environmental Management Division, October 2004.
- U.S. EPA Standard Operating Safety Guides (SOSG), U.S. EPA Office of Emergency and Remedial Response, Publication 9285.1-03, June 1992.
- Occupational Safety and Health Guidance Manual for Hazardous Waste Site Activities, National Institute for Occupational Safety and Health (NIOSH), OSHA, U.S. Coast Guard (USCG), EPA, October 1985.

1.2 Instructions for Users

This chapter must be implemented across all EPA regions, OLEM special teams, and Headquarters (HQ). This means each EPA organization must adopt the minimum Agency requirements and management practices listed in this chapter and produce a customized version of the chapter that is reviewed/updated on an annual basis. The customized version of this chapter will become the organization's OSHA-compliant PPE program. Other organizations within EPA are also encouraged to implement this chapter.

To customize the chapter, users must (1) complete Appendix A and (2) insert organization-specific information into the blank spaces (highlighted in yellow) that appear throughout the chapter. If organizations advocate additional policies and procedures, they must document them in Appendix B. Tools have been developed to support this chapter, including a glossary (Appendix C). An implementation checklist is included in the "Forms" section of the manual's website as a tool to assist each organization in ensuring that they have met the requirements of this chapter.

See the Introduction to this manual for details on customizing and posting an organization's PPE program to the manual's website. The website also includes tools and resources that will be helpful to users, including downloadable forms, reference documents, and training materials.

2.0 ROLES AND RESPONSIBILITIES

Health and Safety Program Contacts (HSPCs); Removal Managers; Safety, Health, and Environmental Management Program (SHEMP) Managers; On-Scene Coordinators (OSCs) and other emergency responders who wear PPE; Medical Monitors; and Equipment Managers have roles and responsibilities in implementing the Agency's PPE program. Appendix A details the tasks that these key personnel must perform. If an organization wishes to delegate a task to someone other than the default assignment presented in the appendix, users can do so when they customize Appendix A and when they fill in the yellow-highlighted areas that appear throughout the chapter's text. During an emergency response, an OSC often serves as the Onsite Safety Officer.

3.0 PPE REQUIREMENTS

Each EPA organization must address the following PPE requirements in their written PPE program and incorporate these elements in all site-specific work:

- Onsite medical monitoring
- PPE training
- PPE inspection, cleaning, maintenance and storage
- Fitting, donning, and doffing PPE
- Controlling the hazards associated with PPE use

Section 4.0 of this chapter discusses the selection of PPE, including site hazard assessment, selection procedures and policies, and factors that could impact PPE selection. Section 5.0 discusses the proper decontamination and disposal of PPE.

3.1 Onsite Medical Monitoring

The Onsite Safety Officer (or another designated person) is responsible for ensuring that a Medical Monitor[1] is on site to monitor emergency responders' vital signs, if conditions warrant. Onsite medical monitoring must be performed whenever emergency responders are required to don Level A PPE, and in certain cases, Level B PPE. The manual's Physical Stress Management Program chapter provides details about specific conditions that warrant onsite medical monitoring. Medical Monitors must receive information on the type of PPE that is being worn so that they will know which PPE-related hazards (described in Section 3.5) might be present and can identify an appropriate monitoring plan to protect emergency responders.

In the event an emergency responder is exposed or potentially exposed to site contaminants (e.g., PPE is breached or the worker develops symptoms), medical attention must be sought and the SHEMP Manager and Removal Manager must be notified. Follow up medical monitoring will be performed as determined by the SHEMP Manager and the occupational physicians administering the Medical Surveillance Program. The HASP must specify a hospital capable of handling injured and ill responders, and the Medical Monitor must communicate all relevant information regarding the exposure to the hospital.

3.2 PPE Training Requirements

The SHEMP Managers or HSPC (or another designated person) is responsible for ensuring that emergency responders receive PPE training. To reduce the number of training courses required, PPE training should be incorporated into the HAZWOPER 40-hour training and 8-hour refresher training. Emergency responders must receive initial training prior to using PPE in the field. The purpose of PPE training is to familiarize emergency responders with the equipment in a non-hazardous setting, using hands-on and classroom activities. The training is also intended to motivate emergency responders to use and maintain PPE properly. At a minimum, training must address the following topics:

---

[1] The "Medical Monitor" must be a competent health and safety professional (e.g., a local emergency medical technician [EMT], a nurse, or a nurse assistant) who knows how to measure and interpret vital signs, recognize the symptoms of physical stress-related disorders, and monitor work/rest cycles.

- OSHA requirements delineated in:
  - 29 CFR 1910(g)(5), *Personal Protective Equipment Program*
  - 29 CFR 1910 Subpart I, Personal Protective Equipment (see 1910.132).
  - 29 CFR 1910 and 1926, Subpart Z - Toxic and Hazardous Substances
  - 29 CFR 1910.134, Respiratory protection (see also the manual's Respiratory Protection Program chapter)
- Circumstances when PPE is necessary.
- Proper use and selection of PPE, including equipment capabilities and limitations.
- Procedures and responsibilities for decontaminating, cleaning, storing, maintaining, repairing, and inspecting PPE, as well as donning, doffing, and adjusting PPE to ensure a proper fit.
- Information about the useful life and disposal of PPE.
- Consequences of not using PPE or using it improperly.
- Signs of PPE failure and emergency procedures to follow in the event of PPE failure.
- Potential difficulties, discomfort, and hazards of wearing PPE.

The SHEMP Manager and/or the HSPC will determine whether HAZWOPER training provides adequate coverage of PPE topics. If so, emergency responders who receive written certification documenting the successful completion of HAZWOPER training will be deemed to be properly trained and certified in PPE use. Completed training requirements will be tracked in EPA's Field Readiness Module (FRM). (*Note: Prior to granting certification, instructors must determine whether trainees have an understanding of the PPE training elements and whether they know how to use PPE properly. Instructors typically assess this by administering a written test and requiring attendees to demonstrate their skill by donning and doffing (removing) PPE. Appendix D provides sample test questions that can be used to assess a trainee's understanding of PPE requirements.*)

As discussed elsewhere in this manual, when in the field, pre-entry briefings (or "tailgate meetings") must be held at the start of each work shift. PPE requirements should be highlighted during those briefings to ensure that emergency responders are adequately protected against site-specific hazards.

3.3 PPE Inspection, Cleaning, Maintenance, and Storage

The HSPC (or another designated person) is responsible for procuring PPE, in accordance with EPA policies on standard issue equipment. Single-use or disposable PPE should be purchased and used whenever practicable. An EPA Equipment Manager or contractor (or another designated person) is responsible for the inspection, cleaning, maintenance, and storage of all centrally stored PPE. Individual emergency responders are responsible for performing these activities for PPE assigned specifically to them.

3.3.1 PPE Inspection

Emergency responders must inspect PPE regularly and before and after each use, to check for defects and damage. Garments and other PPE in storage must be inspected at least annually, or as recommended by the manufacturer. Defective or damaged equipment must be tagged as out-of-service and locked up, or discarded and immediately removed from the work site. See the "Forms" section of the manual's website for a sample PPE inspection checklist and inspection log for a Level A suit.

3.3.2 PPE Cleaning and Maintenance

All emergency responders are responsible for routine cleaning of their individually assigned PPE. (Decontamination of PPE used in the field is addressed in Section 5.0.) As appropriate, emergency responders should be issued single-use PPE to avoid problems associated with decontaminating reusable PPE (see Text Box 2). When performing routine cleaning of reusable PPE:

- Always follow the manufacturer's recommendations to avoid damaging the PPE. For example, some cleaning solutions compromise the integrity of protective helmets' shells.
- Clean and maintain PPE according to the manufacturer's recommendations. Before being re-issued, PPE must be thoroughly sanitized.
- Disassemble, wash, and sanitize reusable respirators after each use (see the manual's Respiratory Protection Program chapter).

Employees must not repair PPE without prior approval from their HSPC (or another designated person). Reusable PPE may require maintenance by the manufacturer to maintain integrity and certification. Employees must perform PPE maintenance and repairs only according to their level of expertise, training, and certifications. Many manufacturers specify which repairs, if performed by the end-user, will void the product warranty. All maintenance and repairs must be recorded (see Section 3.3.4).

Text Box 2
Single-use vs. Reusable PPE

The costs and hazards associated with decontaminating reusable PPE often outweigh the costs of using single-use gear. Extensive contamination of any item, even a "reusable" one, may render it unsafe for reuse. Emergency responders normally wear single-use CPC, including suits such as Tyvek and Saranex, inner/outer gloves, and boot covers. Reusable PPE used by emergency responders includes:

- Respirators (except single-use masks)
- Respirator cartridges (with a shelf life)
- Level A/B suits
- Steel-toe rubber boots

Incident-specific decontamination procedures outlined in site-specific HASPs must be followed.

3.3.3 PPE Storage

Certain equipment failures can be directly attributed to improper storage. The HSPC or Equipment Manager (or another designated person) is responsible for implementing procedures for appropriate PPE storage, both for equipment that is centrally stored as well as equipment assigned to individual emergency responders. EPA recommends the following:

- Store goggles and safety glasses in protective cases.
- Store PPE (such as helmets, boots, etc.) in clean, dust-proof containers or bags out of direct sunlight.
- PPE should ideally be stored under climate-controlled conditions. PPE, stocked gear bags, and/or go-kits should not be stored in hot, cold, or other extreme environmental conditions, and they should not be stored in vehicles (government-owned or rentals) for even short periods of time. Do not store helmets on the rear window shelf of a vehicle.
- Store different kinds of clothing and gloves separately to prevent errors in selection.
- Hang or fold protective clothing in accordance with manufacturers' recommendations.
- Never store contaminated PPE near new protective clothing or street clothing. Potentially contaminated, reusable clothing must be stored (usually bagged) away from new PPE, in a well-ventilated area, with good air flow around each item, until the garment is decontaminated or disposed.

- See the manual's Respiratory Protection Program chapter for detailed procedures on storing respirators.

3.3.4 PPE Inspection and Maintenance Records

The HSPC, Equipment Manager (or another designated person) is responsible for maintaining PPE inspection and maintenance records. The records must include the following information:

- Clothing/equipment item ID number (e.g., item serial number)
- Date of inspection
- Inspector's name
- Inspection results
- Maintenance/repairs
- Any unusual conditions noted

A sample inspection checklist found in the "Forms" section of the manual's website, and the manual's Respiratory Protection Program chapter provides a checklist specifically for respirators.

3.4 Fitting, Donning, and Doffing PPE

Appropriately-sized PPE must be provided to emergency responders. Tight-fitting garments can tear, especially at the knees, crotch, shoulders, back, and elbows. Clothing that is too big is easily snagged and limits the user's dexterity. The Removal Manager, SHEMP Manager, or HSPC (or another designated person) must ensure that: (1) a sufficient stock of appropriately-sized PPE (including Level A, B, and C ensembles and cold weather gear) is maintained for all emergency responders; and (2) all emergency responders have received appropriate respirator fit tests. For details on respirator fit-testing requirements, see the manual's Respiratory Protection Program chapter.

The Onsite Safety Officer (or another designated person) is responsible for ensuring that site-specific procedures for donning and doffing PPE are incorporated into HASPs. Donning and doffing procedures differ depending on what type of ensemble responders are using. Tables 8-7 and 8-8 of Occupational Safety and Health Guidance Manual for Hazardous Waste Site Activities provide examples of procedures that can be used to don and doff a fully-encapsulating ensemble with a self-contained breathing apparatus (SCBA). Chapter 5.2.5 in the SOSG and Appendix J of this chapter offer other examples of donning and doffing procedures.

Site-specific donning and doffing procedures should include the use of an assistant where necessary. Donning and doffing certain types of PPE without assistance could risk PPE failure or damage. Care must be taken to prevent the spread of contaminants on the PPE. Decontamination procedures should limit the potential for cross contamination and may include gross decontamination of outer boots, gloves, and suits as necessary to prevent tracking of contaminants into the contamination reduction zone (CRZ) and clean zone (see Section 5.0 on decontamination).

3.5 Controlling Hazards Associated with PPE Use

PPE use itself poses health and safety hazards, ranging from minor discomfort to life-threatening heat stroke (see Text Box 3). The magnitude of the hazard varies considerably and depends on many factors, including the individual's fitness level, the type of PPE worn, the work demands, individual work practices, mission duration, and environmental conditions. The use of PPE can also lead to reduced efficiency and work performance.

Text Box 3
Hazards Posed by PPE Use

- Heat-related illnesses (heat stress, heat stroke)
- Dehydration
- Exhaustion
- Limited vision
- Restricted mobility
- Increased risk of slip/trip/fall incidents (slip/trip/fall hazards are the most common safety hazard on EPA field actions)
- Increased risk of bump/struck-by incidents due to limited visibility
- Psychological stress (fully-encapsulating suits can aggravate claustrophobia)
- Impaired ability to communicate

Among the hazards posed by PPE use, heat stress is one of the most common and potentially dangerous. Heat stress is most often associated with the use of heavy or reduced-permeability clothing (e.g., heavy coveralls, Tyvek suits, splash suits, or Level A or B suits, especially fully-encapsulating ensembles) and intensive work activities. Emergency responders working in such conditions must be monitored regularly for signs of heat stress. The manual's Physical Stress Management Program chapter provides detailed information on onsite medical monitoring procedures and heat stress management. Emergency responders should also be aware that PPE can cause hazards working in cold environments. For example, employees may be at increased risk of developing frostbite if they wear non-insulated steel-toe safety shoes in cold environments. Also, their hands may not be adequately protected from the cold if they are required to wear safety gloves for protection against chemicals or water.

The manual's Respiratory Protection Program chapter discusses the hazards associated with wearing respirators, and it also describes EPA's policy on factors that can affect the safe use of respirators, such as facial hair, eyeglass and contact lens use, and gum or tobacco chewing.

The Onsite Safety Officer (or another designated person) is responsible for ensuring that site-specific procedures for managing PPE hazards are incorporated into the HASP, such as work/rest ratios, crew rotations, and accommodations for especially demanding conditions. Recommended measures for controlling the hazards posed by PPE include:

- **Treat PPE as the last line of defense for worker protection.** With the exception of CBRN incidents, PPE must be used only after all other feasible hazard control options, including engineering controls, work practices, and administrative controls, have been implemented.
- **Maintain physical fitness to ensure emergency responders' ability to withstand the physical strain of PPE use.** Compared to people in poor physical condition, a fit person will experience less physiological strain, a lower heart rate, a lower body temperature (indicating less retained body heat), more efficient sweating, slightly lower oxygen consumption, and slightly lower carbon dioxide production when using PPE. Also, the degree to which a worker's body has acclimatized to working under extreme environmental conditions, such as high heat, may affect work output and physical function. Acclimatization to working in a hot environment is discussed in the manual's Physical Stress Management Program chapter.

- **Be aware of the symptoms of PPE failure.** Emergency responders who experience any of these symptoms while wearing PPE must immediately contact their Onsite Safety Officer and/or the onsite Medical Monitor:
  - Perception of odors, especially while wearing respirators
  - Skin irritation
  - Acute discomfort
  - Difficulty breathing
  - Unusual fatigue
  - Dizziness
  - Inability to see, hear, or speak clearly
  - Uncomfortable restriction of movement
  - Rapid pulse, nausea, or chest pain
- **Implement the buddy system**. Whenever possible, emergency responders should work in pairs or teams, and they should be instructed to monitor the integrity of their partner's gear and to remain alert for symptoms of PPE failure.

4.0 PPE SELECTION

For site-specific work, the Onsite Safety Officer (or another designated person) has overall responsibility for coordinating the selection and distribution of PPE to emergency responders and for ensuring that the selected PPE is appropriate for the site-specific hazards. The HSPC may provide assistance in the selection of PPE for site-specific use. EPA has created Guidelines for PPE Ensemble Selection to assist emergency responders in selecting PPE ensembles for specific activities and tasks and determining which ensembles and air monitoring equipment should be used to address specific chemicals.

4.1 Site Hazard Assessment

HAZWOPER (29 CFR 1910.120) requires a preliminary assessment be conducted prior to site entry in order to select appropriate employee protection methods. Text Box 4 provides HAZWOPER's initial entry requirements for PPE. Immediately after initial site entry, HAZWOPER also requires a more detailed evaluation of site-specific characteristics to further evaluate existing hazards and assist in selecting appropriate engineering controls and PPE for specific work-related tasks (i.e., a job hazard analysis). The PPE standard (29 CFR 1910.132) also requires that a job hazard analysis be conducted before performing any site work. If the site hazard assessment and job hazard analysis are performed and included in the HASP, OSHA's requirements for both standards will be met.

Text Box 4
HAZWOPER Initial Entry Requirements for PPE

The HAZWOPER standard requires the following:

- 1910.120(c)(5)(i): exposure must be less than PELs
- 1910.120(c)(5)(ii): If positive-pressure SCBA is not used on initial entry, must have an escape SCBA
- 1910.120(c)(5)(iii): If unknown hazards, at least Level B PPE with direct reading instruments for identifying IDLH conditions
- 1910.120(c)(5)(iv): Once the hazards of the site have been identified, select PPE in accordance with 1910.120(g)

Selection of the appropriate PPE for time-critical removal actions and emergency response is a complex process that must take into consideration several factors, such as the nature of the hazards, routes of exposure (e.g., inhalation, skin absorption, ingestion, eye or skin contact, injection), the potential presence of unknown chemicals, and PPE performance in providing a barrier to the hazards. The first step in the PPE selection process is to identify and evaluate the hazards and/or

suspected hazards present at a site. Emergency responders must consider the following range of hazards for which PPE may be required:

- Chemical hazards (solid, liquid, gas, aerosol, particle, dust, smoke, fume, mist, vapor).
- Biological hazards (aerosols, liquid, particle).
- Fire and explosion hazards.
- Oxygen deficiency (e.g., confined space entry).
- Electrical hazards.
- Safety hazards (e.g., sharps, pinching objects, struck-by or struck-against hazards; moving machinery, tools or vehicles, etc.).
- Ionizing or non-ionizing radiation hazards.
- Heat or cold exposure.
- High altitudes.
- Noise and vibration.

Note: PPE used in response to the intentional release of CBRN agents is discussed in Section 4.3.5. See also the manual's Chemical and Biological Agents chapter and its Radiation Safety Program chapter.

A preliminary hazard assessment must be conducted by the Onsite Safety Officer (or another designated person) to determine the appropriate hazard controls prior to initial site entry or during the early phases of a response. All known or suspected hazards and conditions that may cause death or serious harm must be identified during this assessment.

Since emergency responders are expected to respond to hazardous waste sites and emergency situations where conditions are often largely unknown, responders must be able to select PPE based on their training and experience in assessing unknown environments. The Removal Managers, SHEMP Manager, and HSPC must therefore ensure that all emergency responders responsible for selecting PPE are adequately trained in conducting site hazard assessments, and in the use and interpretation of direct reading instruments.

Guidance on using direct reading instruments to evaluate vapor and gas concentrations and determine appropriate levels of protection is provided in Chapter 6 of the SOSG. Level B is the minimum level of protection to be used for initial site entry or during the early phases of a response where site conditions have not been fully characterized (Chapter 6.9.3, SOSG).

Emergency responders must always reassess site hazards based on site conditions and job tasks. As additional information on site hazards becomes available and job tasks become better defined, the site hazard assessment and job hazard analysis must be updated. Selection of PPE ensembles for subsequent entries and job tasks must be based on the level of protection in accordance with the following:

- The OSHA permissible exposure limits (PELs) (i.e., Tables Z-1, Z-2, and Z-3 of 29 CFR 1910.1000).
- Published recommended occupational exposure levels for known or suspected hazardous substances (e.g., threshold limit values [TLVs], recommended exposure limits [RELs], or other published occupational exposure limits). If there is no PEL or published occupational exposure level, EPA may use other published information as a guide in the selection of appropriate PPE.

- Other known or suspected hazards identified during the preliminary hazard assessment.[2]

Monitoring with direct-reading instruments (e.g., multigas detector, photoionization detector, Geiger-Mueller survey meter, alpha scintillator survey meter, and others) must be conducted during the initial site entry by a qualified person for hazardous levels of ionizing radiation and immediately dangerous to life or health (IDLH) concentrations or other conditions that may cause death or serious harm (e.g., oxygen deficiency, explosive atmospheres).[3] Experience, judgment, professional knowledge, and a review of any existing data or information, such as material safety data sheets (MSDSs), will also help with the site hazard assessment and PPE selection.

Once the hazards at the site have been identified, the potential exposure pathways and risks associated with these hazards must be determined, (e.g., acute inhalation hazard, skin hazard, explosive hazard, etc.) and communicated to employees. Risks to consider include, but are not limited to, the following:

- Air concentrations exceeding the PELs and recommended occupational exposure limits
- IDLH concentrations
- Dermal contact hazards from toxic or corrosive materials
- Skin absorption and irritation
- Eye or mucous membrane irritation
- Explosion sensitivity and flammability
- Oxygen deficiency or enrichment
- Splash hazards

Based on Section 1910.132(d)(2) of the OSHA PPE standard, the Onsite Safety Officer (or another designated person) must ensure that a site hazard assessment has been performed and that it has been documented through written certification. The certification must identify the workplace or job duties evaluated, the date that the hazard assessment was performed, and the name of the person certifying the hazard assessment. These records should be documented in the job/task hazard analysis portion of a site-specific HASP. A sample site hazard assessment form and certification document are provided in Appendix E. Alternatively, the detailed hazard assessment (or a job hazard analysis) included in the site-specific HASP can serve as the required documentation, as long as the HASP has addressed PPE selection for each task requiring PPE. Non-mandatory compliance guidelines for hazard assessment and PPE selection are provided in 29 CFR 1910 Subpart I—Personal Protective Equipment, Appendix B.

---

[2] TLV means threshold limit value. TLVs are occupational exposure limits for chemical substances and physical agents established by the American Conference of Governmental Industrial Hygienists (ACGIH). REL means recommended exposure limit. RELs are occupational exposure limits for chemical and physical agents established by the National Institute for Occupational Safety and Health (NIOSH). Both TLVs and RELs are recommended exposure limits and do not have the force of law (such as the OSHA PELs) unless enacted into law by OSHA or a state with an OSHA-approved job safety and health program. TLVs are published annually and may be purchased from the ACGIH Publications Store, 1330 Kemper Meadow Drive, Cincinnati, Ohio 45240, 513-742-2020. RELs are included in the NIOSH Pocket Guide to Chemical Hazards.

[3] IDLH means an atmospheric concentration of any toxic, corrosive, or asphyxiant substance that poses an immediate threat to life or would interfere with an individual's ability to escape from a dangerous atmosphere. A listing of the available IDLH values is located on the NIOSH website.

4.2 PPE Selection Procedures

When selecting PPE, particularly chemical protective clothing (CPC), the Onsite Safety Officer (or another designated person) should consider the relative costs of single-use versus reusable CPC. Although the initial cost of single-use PPE may be higher, the costs of decontaminating reusable equipment can make the total cost more expensive in the long term. For this reason, EPA recommends issuing single-use PPE as much as is practicable.

Text Box 5
Avoiding Overprotection

The goal for PPE selection is to match the level of protection to the magnitude and nature of the hazard. PPE use itself poses serious health and safety hazards, including heat stress, physical strain, and psychological stress, as well as impaired vision, mobility, and communication. PPE that provides a high level of protection is typically more physically restrictive than less protective ensembles. Both over-protective and under-protective PPE can be hazardous and must be avoided.

One method of selecting the appropriate level of PPE is to use a numerical criterion—the total atmospheric vapor/gas concentration. Table 1 below, which is based on Exhibit 5-3 in Chapter 5 of the SOSG, provides guidelines on the level of PPE suggested for different ranges of vapor or gas concentrations. Note that these suggested levels must be used in conjunction with the appropriate air monitoring and assessment techniques as described in Chapter 6 of the SOSG. Additional guidance on PPE selection for initial site entry activities is provided in Guidelines for PPE Ensemble Selection.

As site conditions change or more information becomes available, the required levels and types of PPE may change. Exposure monitoring must be performed continually in order to refine the hazard assessment and corresponding PPE requirements. In particular, in accordance with 29 CFR 1910.120(h)(4), if any employee has been exposed to elevated levels of hazardous substances, extensive personal monitoring must be conducted, in conjunction with additional site control measures (Chapter 6.1, SOSG).

Table 1
Suggested Levels of Protection Based on Air Monitoring

Vapor/Gas Concentration from Photoionization (PID) or Flame Ionization (FID) Direct Reading Instrument (in parts per million [ppm] above background)	Suggested Level of Protection[a] (see Section 4.3)
500 to 1,000 ppm	Level A
5 to 500 ppm	Level B
Background to 5 ppm	Level C

[a] Note that suggested PPE levels based on vapor/gas concentration are **only** for situations where the identity of the vapor or gas constituents is unknown. They do not address IDLH environments. Refer to Section 6.9 of the SOSG for more information.

PPE manufacturers are a good source of information on PPE selection, especially protective clothing. In addition, databases compiled by commercial entities (e.g., Thomson Micromedex) also serve as a useful source of information. In selecting PPE, it is critical to avoid both over-protection and under-protection (see Text Box 5). In addition, project objectives and cost considerations should be taken into account. For example, it would be economically unwise to use expensive gloves that offer an 8-hour breakthrough time for a sampling activity that is only anticipated to require 15 minutes of effort. Guidelines and quick reference tables used for selecting specific types of PPE are provided as follows:

- **Eye and face protection:** Appendix F-1. Additional guidance is available on OSHA's Eye and Face Protection Safety and Health Topics Web page.
- **Head protection:** Appendix F-2.

- **Hand protection:** Appendix F-3.
- **Foot protection:** Appendix F-4.
- **Protective clothing and ensemble selection:** Appendix F-5 provides general guidance on selecting chemical protective clothing. Guidelines for PPE Ensemble Selection provides guidance on selecting PPE ensembles according to specific response activities.
- **Fall protection:** Appendix F-6.
- **Ensemble selection:** Guidelines for PPE Ensemble Selection.
- **Respiratory protection**: See the manual's Respiratory Protection Program chapter.
- **Hearing protection:** See the manual's Physical Stress Management Program chapter.
- **Electrical protective devices**: See 29 CFR 1910.137.

All PPE selected for emergency responders must meet the requirements of 29 CFR Part 1910, Subpart I, and 29 CFR 1910.120 (g)(3). All eye and face equipment, helmets/hard hats, and safety shoes must meet American National Standards Institute (ANSI) standards, which have been incorporated by reference in OSHA's PPE-related standards. OSHA allows the continuing use of PPE purchased prior to July 5, 1994, as long as the PPE complies with the older ANSI standard specified by OSHA or has been demonstrated to be equally effective. Protective devices meeting a subsequent edition of the same ANSI standard are also acceptable.

Text Box 6
Respiratory Protection for Unknown Inhalation Hazard

During initial site entry, when an unknown inhalation hazard may be present, positive-pressure SCBAs should be used until the Onsite Safety Officer determines, based on air monitoring, that a decreased level of respiratory protection is sufficient. If emergency responders are expected to remain in the area of a suspected chemical or biological agent, a NIOSH-approved CBRN SCBA respirator must be used. (If positive-pressure SCBAs are not immediately available, responders may use a positive-pressure supplied air respirator with an escape SCBA.)

4.3 EPA/OSHA PPE Levels of Protection

EPA and OSHA have developed a system of grouping PPE into four basic levels, A through D, with A representing the highest level of protection. During initial site entry, emergency responders must use a minimum of Level B PPE and enter the site with direct reading instruments (see Text Box 6). IDLH conditions require an ensemble that provides protection equivalent to Level B PPE at a minimum (Chapter 6.9.3, SOSG). EPA's suggested Level B ensemble for initial site entry is provided in Guidelines for PPE Ensemble Selection.

The following sections provide guidelines that present the minimum protective ensembles recommended for Level A through Level D PPE.

Selection of PPE ensembles requires some interpretation and full consideration of all site conditions. No single protective ensemble is capable of protecting against all hazards. Relying solely on PPE marketed and sold on the basis of EPA/OSHA PPE levels could result in exposures above acceptable levels or unnecessary overprotection, resulting in reduced operational effectiveness due to lack of mobility, decreased dexterity, or reduced mission duration.

The National Fire Protection Association (NFPA) has developed performance standards for protective ensembles (Appendix G). NFPA does not test, certify, or approve of PPE. Rather, they publish criteria for others (e.g., manufacturers or independent certification and testing organizations) to use in testing the

design and performance of materials used in ensembles for different levels of protection. A manufacturer may apply a label to a product that certifies that the product is compliant with NFPA's criteria. NFPA's performance standards are for the materials that are used in the construction of parts of an ensemble (e.g., glove and footwear materials are tested for puncture-resistance; garment materials and seams are tested for inward leakage; and external fittings are tested for pull-out strength). The NFPA performance standards are another tool EPA can use when selecting PPE ensembles.

4.3.1 Level A

Level A PPE is required for incidents where the greatest potential for exposure to hazards exists and when the greatest level of skin, respiratory, and eye protection is required. Level A is also selected when EPA is unable to fully characterize the conditions suitable for Levels B, C, and D. To ensure a constant state of readiness and provide for a backup or safety net system for all first responders nationally, EPA emergency response organizations must be prepared to respond to a Level A incident at all times (see Text Box 7).

Meeting any of the following criteria may warrant the use of Level A protection:

- Hazardous substances have been identified and require the highest level of protection for skin, eyes, and the respiratory system.
- The atmosphere contains less than 19.5 percent oxygen. (Level B is also acceptable.)
- Site operations involve a high potential for splash, skin immersion, or exposure to suspected skin hazards.
- Operations are being conducted in confined, poorly ventilated areas, and the presence of life threatening or highly toxic substances in the air has not yet been ruled out.
- Direct-reading instruments indicate high levels of unidentified but potentially hazardous vapors or gases in the air.
- Direct-reading instruments are not available to test the air and suspected highly toxic substances may be present.

It may be necessary to base the decision to use Level A protection on indirect evidence. Other conditions that may indicate the need for Level A protection include:

- Confined spaces.
- Suspected or known highly toxic substances, especially when field equipment

Text Box 7
Level A Readiness

To ensure a constant state of readiness and provide for a backup or safety net system for all first responders nationally, EPA emergency response organizations must be prepared to respond to a Level A incident at a moment's notice. To accomplish this, they must maintain a list of Level A-qualified individuals who are fully trained to use Level A equipment, medically qualified to wear such equipment, and compliant with requirements to exercise two or more times per year wearing full Level A equipment. It is acceptable for EPA organizations to call upon outside entities (e.g., the United States Coast Guard [USCG] or START/ERRS contractors) to assist them in fielding a group of Level A-qualified individuals.

To demonstrate Level A readiness, each organization must:

- Document the completion of all Level A exercises in the EMP.
- Maintain a list of all Level A personnel in the EMP.
- Ensure that specific Level A requirements are written into contract language if outside entities (e.g., USCG or contractors) will be expected to assist in responding to a Level A incident.

In addition, the Removal Manager (or another designated person) must prepare a strategy documenting his/her organization's Level A readiness. The strategy must list the names of EPA personnel who are prepared to don Level A equipment and indicate whether written agreements are in place with other entities to provide Level-A qualified individuals if necessary.

is not available to test concentrations (or concentrations are below IDLH levels, as in the case of some chemical warfare agents).

- Visible indicators such as leaking containers or smoking chemical fires.
- Potentially dangerous tasks, such as initial site entry (see Text Box 6).

Table 2 presents EPA recommended PPE for a general Level A ensemble. Specific ensemble recommendations are provided in Guidelines for PPE Ensemble Selection.

4.3.2 Level B

Level B protection is required when site conditions warrant the highest level of respiratory protection but less than Level A skin protection is needed. It is the minimum level of PPE recommended for performing initial site entries until the hazards have been adequately characterized. Any of the following circumstances may warrant the use of Level B protection:

- The type and atmospheric concentration of substances have been identified and require a high level of respiratory protection.
- Skin protection less than Level A is needed.
- The atmosphere contains less than 19.5 percent oxygen.
- The presence of incompletely identified vapors and gases is indicated, but they are not suspected of being harmful to the skin, or will not readily penetrate Level B suit material.

Table 3 presents EPA recommended PPE for a general Level B ensemble. Specific ensemble recommendations are provided in Guidelines for PPE Ensemble Selection.

Table 2
Recommended Level A Ensemble Components

Component	Type	Manufacturer/ Recommended Material	Notes/Comments
Respirator	Positive-pressure full-facepiece SCBA or positive-pressure supplied-air respirator with escape SCBA[a]	EPA uses a standard issue respirator or a NIOSH CBRN-certified respirator if CBRN hazards exist. Another brand or style may be substituted for the standard issue equipment if employees cannot achieve an acceptable fit with that equipment.	See Appendix F of the manual's Respiratory Protection Program chapter for information on the brand, model, acceptable configurations, and specific care instructions for the standard issue respirator.
Suit	Totally encapsulated chemical- and vapor-protective suit[b]	DuPont® Tychem™ or Responder CSM™	Other material types may be substituted based on known contaminants.
Inner Gloves	Light weight	Nitrile, Neoprene, PVC, or Viton®	Other material types may be substituted based on known contaminants.

Table 2
Recommended Level A Ensemble Components

Component	Type	Manufacturer/ Recommended Material	Notes/Comments
Outer Gloves	Integral part of suit	See Guidelines for PPE Ensemble Selection	Confirm chemical performance rating for suspected contaminants. Glove material may have different performance ratings than suit material. All fully-encapsulating suit materials must be compatible with substances involved.
Inner Boot	Integral part of suit	–	
Outer Boot	HazMat boot[b]	–	Confirm chemical performance rating of outer boot for suspected contaminants. Provides slip/abrasion resistance.
Hard Hat	Standard[c]	–	–

[a] Must be NIOSH CBRN-certified if CBRN hazards exist.
[b] Must meet NFPA 1991/NFPA 1994 requirements depending on the site hazard assessment.
[c] Must comply with the applicable ANSI standard.

Table 3
Recommended Level B Ensemble Components

Component	Type	Manufacturer/ Recommended Material	Notes/Comments
Respirator	Positive-pressure full-facepiece SCBA or positive-pressure supplied-air respirator with escape SCBA[a]	EPA uses a standard issue respirator or a NIOSH CBRN-certified respirator if CBRN hazards exist. Another brand or style may be substituted for the standard issue equipment if employees cannot achieve an acceptable fit with that equipment.	See Appendix F of the manual's Respiratory Protection Program chapter for information about the brand, model, acceptable configurations, and specific care instructions for the standard issue respirator.
Suit	Chemical-resistant clothing (liquid-splash protective suit with integral boot and hood)[b]	DuPont® Tychem® CPF 3	Other material types may be substituted based on known contaminants.
Inner Gloves	Light/medium weight	Nitrile, Neoprene, PVC, Viton®, or PE/EVAL	Other material types may be substituted based on known contaminants.
Outer Gloves	Medium/heavy weight	Butyl MIL-G12223, Nitrile, Neoprene, PVC, Viton®, PE/EVAL, or heavy weight Nitrile or Neoprene	Confirm chemical performance rating. Other material types may be substituted based on known contaminants.
Inner Boot	Safety work boot	–	Other boot types may be substituted based on known contaminants and physical hazards. Puncture resistant shanks may be required.
Outer Boot Covering	Heavy weight Latex booties or outer boots[b]	Latex booties are used to protect suit for light duty applications. NFPA-rated outer boots may be required based on anticipated site conditions and tasks.	Other outer boot coverings may be substituted based on known contaminants/anticipated tasks.
Hard Hat	Standard[c]	–	–

[a] Must be NIOSH CBRN-certified if CBRN hazards exist.
[b] Must meet NFPA 1992/NFPA 1994 requirements depending on the site hazard assessment.
[c] Must comply with the applicable ANSI standard.

4.3.3 Level C

Level C protection is required when the concentration and type of airborne substances is known and the criteria for using air-purifying respirators are met. The main difference between Levels C and B is the type of respiratory protection required: Level B protection includes positive-pressure, full-face piece SCBAs or positive-pressure supplied-air respirators with escape SCBAs, and Level C protection includes full-facepiece air-purifying respirators. The same type of chemical-resistant clothing is used for both Levels B and C. Meeting any of the following criteria may warrant use of Level C protection:

- The atmospheric contaminants, liquid splashes, or other potential direct contact with the site's hazard(s) will not adversely affect or be absorbed by the skin.

- The types of air contaminants have been identified, concentrations do not exceed IDLH levels, and an air-purifying respirator is available that can remove the contaminants.
- Oxygen concentrations are not less than 19.5 percent by volume, and job functions do not require SCBA.

Table 4 presents EPA recommended PPE for a Level C ensemble. Specific ensemble recommendations are provided in Guidelines for PPE Ensemble Selection.

Table 4
Recommended Level C Ensemble Components

Component	Type	Manufacturer/ Recommended Material	Notes/Comments
Respirator	Full-face air-purifying respirator with appropriate cartridge[a]	EPA uses a standard issue respirator or a NIOSH CBRN-certified respirator if CBRN hazards exist. Another brand or style may be substituted for the standard issue equipment if employees cannot achieve an acceptable fit with that equipment.	See Appendix F of the manual's Respiratory Protection Program chapter for information about the brand, model, acceptable configurations, and specific care instructions for the standard issue respirator.
Suit	Puncture/tear resistant suit material with boot and hood[b]	DuPont® Tychem® CPF 2/CPF 3 or Saranex	Other material types may be substituted based on known contaminants, if considered more appropriate.
Inner Gloves	Light weight	Nitrile, Neoprene	Other material types like Neoprene, PVC, Viton®, or PE/EVAL may be substituted based on known contaminants, if considered more appropriate.
Outer Gloves	Medium/heavy weight	Butyl, Nitrile, or other work glove	Confirm chemical performance rating. Other material types may be substituted based on known contaminants, if considered more appropriate.
Inner Boot	Safety work boot[b]	–	Other boot types may be substituted based on known contaminants and physical hazards. Puncture resistant shanks may be required.
Outer Boot Covering	Heavy weight Latex booties or outer boots[b]	Latex booties are used to protect suit for light duty applications. NFPA rated outer boots may be required based on anticipated site conditions and tasks.	Other outer boot coverings may be substituted based on known contaminants.
Hard Hat	Standard[c]	–	–

[a] Must be NIOSH CBRN-certified if CBRN hazards exist.
[b] Must meet NFPA 1993/NFPA 1994 requirements depending on the site hazard assessment.
[c] Must comply with the applicable ANSI standard.

4.3.4 Level D

Level D is the minimum protection required. Level D protection is sufficient under the following conditions:

- No hazardous air contaminants are present above PELs after a thorough site characterization.
- Due to the nature of the work operations, there are no potential hazards from splashes, immersion, or unexpected inhalation of or contact with hazardous levels of any chemicals.

Table 5 presents EPA recommended PPE for a Level D ensemble. Specific recommendations are provided in Guidelines for PPE Ensemble Selection.

Table 5
Recommended Level D Ensemble Components[a]

Component	Type	Manufacturer/ Recommended Material	Notes/Comments
Respirator	None	–	–
Suit	Coveralls, street clothes, or disposable Tyvek suit	–	Other types may be substituted as appropriate.
Inner Gloves	N/A		
Outer Gloves	As appropriate for physical hazards and for comfort	–	–
Boot	Steel/composite toe	–	Other boot types may be substituted as appropriate. Puncture resistant shank may be necessary based on site hazards.[b]
Outer Boot Covering	As appropriate	–	–
Hard Hat	As appropriate[b]	–	–
Eye protection	Safety glasses/goggles[b]	–	–

[a] Level D protection is not acceptable for chemical emergency responses.
[b] Must comply with the applicable ANSI standards.

4.3.5 PPE for CBRN Hazards

Emergency responders may be required to respond to incidents involving the intentional release of CBRN materials. CBRN materials include, but are not limited to, chemical warfare agents (e.g., sarin, mustard gas), certain toxic industrial chemicals (TICs) (e.g., ammonia, phosgene) used as weapons, biological agents (e.g., anthrax), and radiological or nuclear particulates. The materials may be "weaponized," making them more readily dispersible. OSHA considers incidents involving CBRN materials or other terrorist events to be hazardous materials incidents that are subject to the requirements of the HAZWOPER standard. The manual's Chemical and Biological Agents chapter provides further information on responding to an incident with chemical and biological agents. NIOSH has developed respiratory protection equipment standards for CBRN exposures. For additional information on these standards, see the manual's Respiratory Protection Program chapter. For information on radiological and nuclear hazards, see the manual's Radiation Safety Program chapter.

Table 6 compares EPA/OSHA PPE levels of protection with NFPA and NIOSH protective ensembles for response to CBRN events. Use this table to identify PPE that meets federal and consensus performance

standards when selecting and procuring PPE appropriate for use under CBRN conditions. As noted previously for conventional hazards, selection of PPE ensembles requires some interpretation and full consideration of all response conditions. Appendix H and Guidelines for PPE Ensemble Selection provide information on the selection of PPE for CBRN responses.

Table 6
Ensemble Selection for CBRN Hazards

NFPA/NIOSH Ensemble Description	EPA/OSHA Level
NFPA 1991 worn with NIOSH CBRN SCBA	A
NFPA 1994 Class 2 worn with NIOSH CBRN SCBA	B
NFPA 1971 with CBRN Option with NIOSH CBRN SCBA	B
NFPA 1994 Class 3 worn with NIOSH CBRN APR	C
NFPA 1994 Class 4 worn with NIOSH CBRN APR	C

4.3.6 PPE for Site-Work On or Near Water

Emergency responders respond to incidents (such as oil spills) where there is a risk of drowning from falling or being pulled into the water. When working on, over, or close to the edge of a water source, emergency responders must always wear an appropriate personal flotation device or PFD. PFDs (also referred to as life jackets, life preservers, life vests, flotation suits, and others) have different characteristics and are available in different sizes and styles for various levels of protection (see Tables 7 and 8).

Regulations pertaining to the use of PFDs vary depending on the type of activity and the authority having jurisdiction. In general, on federally controlled waters all boats must be equipped with U.S. Coast Guard-approved PFDs (33 CFR 175, Subpart B). The quantity and type depend on the length of the boat and the number of people on board and/or being towed. Each PFD must be the proper size for the intended wearer (sizing for PFDs is based on body weight and chest size), in good and serviceable condition, and readily accessible. In addition to size, PFDs should be appropriate for the planned activities and the expected water conditions. The U.S. Coast Guard recommends that PFDs always be worn while underway on a boat.

All states also have regulations regarding the use of PFDs. And, when boating in an area under the jurisdiction of the U.S. Army Corps of Engineers, or a federal, state, or local park authority, other regulations may apply. Prior to engaging in boating activities, emergency responders should determine the authority having jurisdiction over the waters and the PFD requirements.

In addition, OSHA has requirements (29 CFR 1926.106) for the use of PFDs when workers are engaged in construction activities where the danger of drowning exits. Employees working over or near water must wear a U.S. Coast Guard-approved PFD and they must inspect the PFD for defects prior to and after each use. For emergency rescue operations, OSHA requires readily accessible ring buoys with at least 90 feet of line every 200 feet.

Table 7
Flotation Characteristics of PFDs

There are three design characteristics for PFDs:

Inherently Buoyant (primarily foam)

- The most reliable.
- Available in wearable and throwable styles.
- Designed for swimmers and non-swimmers.

Inflatable

- The most compact (lightweight and comfortable).
- Available in wearable styles only (some styles have best in-water performance).
- Designed for swimmers.

Hybrid (foam and inflatable)

- Reliable (provide inherent and inflatable buoyancy).
- Available in wearable styles only.
- Designed for swimmers and non-swimmers.

Source: A Boater's Guide to the Federal Requirements for Recreational Boats (and Safety Tips) by the U.S. Coast Guard.

Table 8
PFD Types and Uses

Type	Description	Use
I	Offshore life jackets	Provides the most buoyancy. Effective for all waters, especially open, rough, or remote waters where rescue may be delayed. Designed to turn an unconscious wearer to a face-up position in the water.
II	Near-shore buoyancy vests	Intended for calm, inland waters or where there is a good chance of quick rescue. Will turn some unconscious wearers to a face-up position in water, but the turning is not as pronounced as a Type I device. Turns as well as a Type I foam jacket.
III	Flotation aids	Good for calm, inland waters, or wherever there is a good chance of quick rescue. Turns as well as a Type II foam vest, but may not turn an unconscious wearer face up. Wearer may have to tilt his/her head back to remain in face-up position. Type III foam vest has same minimum buoyancy as Type II device. Available in many styles, colors, and sizes. Generally the most comfortable for continuous wear. Includes float coats, full-sleeved jackets, fishing vests, and vests with features suitable for other activities.
IV	Throwable devices	Can be used anywhere. Designed to be thrown to a person in the water and grasped and held by the user until rescued. Not designed or intended to be worn. Includes ring buoys, buoyant cushions, and horseshoe buoys. There are no U.S. Coast Guard-approved inflatable Type IV devices.
V	Special use devices	Designed for specific activities and must be worn and used in accordance with the approval label. Provides the performance of a Type I, II, or III device (as marked on the approval label). Examples include deck suits, work vests, and sailing vests with a safety harness. Some Type V devices provide significant hypothermia protection. Note: Do not attach the safety harness of a Type V inflatable device to a boat unless it is being worn with a tether less than 6.5 feet in length with quick-release-under-load hardware. Do not use the harness for climbing activities. U.S. Coast Guard approval does not apply to use of the harness as fall protection.

Source: A Boater's Guide to the Federal Requirements for Recreational Boats (and Safety Tips) by the U.S. Coast Guard.

4.4 Factors Impacting PPE Replacement

The duration of the work mission affects PPE selection and must be addressed in the HASP by the Onsite Safety Officer (or another designated person). The factors listed below may determine how long individual emergency responders can work safely and effectively during a single shift without stopping to replace or replenish PPE. (See also Chapter 5.2.2 of the SOSG.)

- **Air supply:** Factors that may reduce the SCBA's rated operating time include work rate, general overall conditioning, body size, and breathing patterns.
- **Ambient temperature:** The ambient temperature affects both the worker and the integrity of the PPE ensemble. Heat stress can quickly become life-threatening, can occur even in moderate ambient temperatures, and generally presents the greatest immediate danger to a worker wearing an encapsulating ensemble (see the manual's Physical Stress Management Program chapter). Temperature can also affect breakthrough times and permeation rates of chemicals.
- **Coolant supply:** Under warm or strenuous work conditions, coolant (e.g., ice or chilled air, refrigeration coils) may be provided to reduce the potential for heat stress. In such cases, the coolant supply will directly affect mission duration. See Section 6.0 (Heat Stress Management) of the manual's Physical Stress Management Program chapter.
- **Extended work schedules:** Long or unusual shifts are often required during emergency response and recovery work. Appendix I provides information on how to calculate allowable exposures for unusual work schedules.

5.0 DECONTAMINATION OF PPE

5.1 Site-Specific Decontamination Plan

The Onsite Safety Officer (or another designated person) is responsible for developing the site-specific PPE decontamination plan as part of the HASP, for ensuring its implementation, and for ensuring that the plan is modified as site conditions change. The HSPC (or another designated person) can assist in the development of this plan. The decontamination plan, often developed in conjunction with PPE selection, must be in place before any emergency responders are allowed to enter potentially contaminated areas. The plan must cover the following:

- Decontamination hazard evaluation and risk assessment.
- PPE for decontamination line assistants.
- Jobs and duties to be performed during decontamination.
- Number and layout of decontamination stations and designated PPE decontamination operations to be performed at each station.
- Decontamination equipment.
- Decontamination methods.
- Procedures to prevent contamination of clean areas.
- Procedures to minimize wearer contact with contaminants during removal of CPC.
- Procedures for disposing of clothing and equipment not adequately decontaminated.

The initial decontamination plan, which is developed in conjunction with the initial site hazard assessment, should be based on worst-case assumptions about the extent and type of contamination.

5.1.2 Emergency Decontamination of PPE

It is the responsibility of the Onsite Safety Officer (or another designated person) to address emergency decontamination in the HASP. Emergency decontamination may be necessary in the event of a fire, explosion, sudden violent storm, medical emergency, etc. The emergency decontamination plan must designate emergency routes of egress, as well as emergency decontamination and egress procedures. Generally, gross contamination should be removed from PPE and placed in specifically-designated containers.

The Onsite Safety Officer (or another designated person) must be informed immediately of the circumstances requiring emergency decontamination, and account for all personnel. If urgent medical treatment is required, decontamination of PPE may be delayed until the victim is stabilized. If decontamination can be performed without interfering with essential first aid, or if a worker has been contaminated with an extremely toxic or corrosive material that could cause severe injury or death to the victim or first aid providers, decontamination should be undertaken immediately. If a heat-related illness develops, protective clothing must be removed as soon as possible (see the manual's Physical Stress Management Program chapter).

Emergency facilities for quick drenching or flushing of the eyes and body must be provided if workers may be exposed to corrosive materials, according to 29 CFR 1910.151(c) and 1926.50(g). Emergency facilities for drenching and flushing must also be readily accessible onsite if workers may be exposed to other splash or dust hazards that could cause injury to the eyes or body. To be effective, wash stations must be properly located and maintained (e.g., water changed per manufacturer's instructions).

5.1.3 Protection of Decontamination Line Assistants

The Onsite Safety Officer (or another designated person) must ensure that decontamination line assistants are provided with suitable PPE and must address their protection in the HASP. The exclusion zone (EZ), contamination reduction zone (CRZ), and clean support zone must be clearly demarcated both in the field and in the site-specific HASP. A task hazard analysis must be conducted for line assistants to determine the appropriate level of PPE required. The level of PPE required for these workers is based on factors such as:

- Expected or visible contamination on responders
- Type of contaminant and associated respiratory and skin hazards
- Total vapor/gas concentrations in the CRZ
- Particulates and specific inorganic or organic vapors in the CRZ
- Results of wipe tests (see Section 5.4)
- Slope and configuration of the CRZ

In some cases, line assistants should wear the same level of PPE as workers in the EZ. In other cases, line assistants may be sufficiently protected by wearing protection one level lower (e.g., wearing Level C protection while decontaminating workers who are wearing Level B).

Normally, line assistants should not enter the EZ. It is advisable to establish a clearly marked boundary within the CRZ beyond which line assistants are not permitted without an upgrade in PPE. Level D is not acceptable within the CRZ. Appropriate decontamination procedures for line assistants must also be addressed in the site-specific HASP.

5.2 Site-Specific Decontamination Procedures

The Onsite Safety Officer (or another designated person) is responsible for developing site-specific standard operating procedures (SOPs) for decontamination and for ensuring that the SOPs are enforced throughout site operations. A single procedure will not effectively remove all types of contaminants nor can decontamination completely remove contaminants. Rather, the goal of decontaminating reusable PPE is to reduce contamination to acceptable levels by following comprehensive procedures. Step-by-step procedures for decontaminating personnel wearing PPE Levels A through C can be found in Appendix J.

The Onsite Safety Officer (or another designated person) must:

- Ensure compliance with the proper decontamination procedures.
- Ensure that adequate contact times for specific decontamination solutions are determined and implemented.
- Ensure adequate time for egress and decontamination are provided for personnel wearing SCBAs.
- Monitor the effectiveness of decontamination procedures.
- Ensure proper handling and disposal of used clothing and equipment.

5.2.1 Decontamination Procedures and Policies

Site-specific procedures for decontamination must address the following:

- Decontamination steps must be performed in a specific sequence.
- Each procedure must be performed at a separate station to prevent cross-contamination.
- Stations must be separated physically to prevent cross contamination and must be arranged in order of decreasing contamination, preferably in a straight line.
- The slope of the CRZ must prevent movement of contaminants into cleaner areas.
- Entry and exit points to the CRZ must be conspicuously marked. (Color-coded tarps/plastic sheeting can be used for designation.)
- Personnel who enter clean areas outside of the CRZ, such as locker rooms, must be completely decontaminated.
- Dressing stations for entry to the decontamination area must be separate from re-dressing areas for exit from the decontamination area.
- PPE, monitoring equipment, etc. must be stored and maintained outside the CRZ.
- To ensure that emergency responders are not exposed to hazards by reusing contaminated PPE, the Onsite Safety Officer (or other designated person) must work with the HSPC (or another designated person) to ensure that reusable PPE is retired prior to the end of its useful life. Equipment logs must be established that document exposures and PPE inspection results. The records must be maintained in conjunction with the PPE inspection records described in Section 3.3.4. When reusable PPE is

being returned for storage, the Onsite Safety Officer must notify the HSPC (or another designated person) and provide the appropriate equipment and inspection logs along with a description of how the equipment was used and the frequency of use.

5.2.2 Procedures to Minimize PPE Contamination

Work practices that help to minimize the required level of decontamination must be established on site and specified in the HASP. The following recommended list of such work practices may be used as a guide:

- Select single-use PPE whenever practicable.
- Make sure that all closures and ensemble component interfaces are completely secured. Seal all pockets, zippers, and other openings.
- Tuck gloves and boots under the sleeves and legs of outer clothing.
- Wear hoods (if not attached) outside the collar.
- Wear disposable outer garments and use disposable equipment where appropriate.
- Tape all junctures to prevent contaminants from running inside the gloves, boots, jackets, and suits.
- Use work practices that minimize PPE contact with hazardous substances (e.g., do not contact potentially hazardous substances unless necessary).
- Use remote sampling, handling, and container-opening techniques (e.g. drum grapples, pneumatic impact wrenches).
- Place monitoring and sampling instruments in bags with openings for sample ports and sensors.
- Encase the sources of contaminants with plastic sheeting or overpacks to prevent PPE contamination.

Text Box 8
Surface vs. Matrix Contamination

Contaminants can be either on the **surface** of and/or have **permeated ("matrix")** the CPC. Matrix contaminants are much harder to detect and remove and can pose a hazard to the next PPE user if the CPC is not thoroughly decontaminated. Factors affecting the extent of chemical permeation include:

- **Contact time.** Minimizing contact time between contaminants and CPC is critical to effective decontamination.
- **Contaminant concentration.** By diffusion, materials move from high to low areas of concentration; as the contaminant level increases, the potential for permeation of CPC increases.
- **Temperature.** Higher air temperatures increase permeation rates.
- **Physical state of contaminants.** Gases, vapors, and low-viscosity liquids tend to permeate more readily than high-viscosity liquids or solids. A solvent or "carrier" present in a mixture can increase the permeation rate of the main chemical contaminant.

5.3 Overview of PPE Decontamination Methods

The Onsite Safety Officer (or another designated person) is responsible for selecting the appropriate level and method(s) of PPE decontamination. The HSPC and SHEMP Manager can be consulted to provide assistance in developing site-specific decontamination procedures. Selection of decontamination methods is based on:

- Contaminant properties (e.g., physical state, toxicity, flammability, persistence) and extent of contamination.
- Effectiveness of the decontamination method and/or solutions.
- Compatibility of the decontamination agent with the material being decontaminated.

- Hazards associated with the decontamination method.
- Costs of disposal of spent decontamination solutions.

Gross decontamination allows the PPE wearer to safely remove PPE. Single-use PPE is discarded after gross decontamination. Reusable PPE must be further decontaminated before being put back into service and will likely require extensive decontamination to render it safe for reuse. Physical removal methods apply mainly to gross decontamination. More extensive decontamination procedures, such as chemical removal or inactivation, must be performed if the PPE is going to be reused (see Text Box 8). These methods are described further below.

5.3.1 Physical Removal for Gross Decontamination

The physical removal methods described below are applicable for gross decontamination of both single-use and reusable PPE.

- **Loose contaminants.** Soils or dusts on PPE and personnel can be removed with water or a liquid rinse. Commercially available anti-static solutions can remove electrostatically attached particles.
- **Adhered contaminants.** Tightly adhered contaminants such as glues, cements, resins, and mud may require more extensive removal methods, which include solidification, freezing (using dry ice or ice water), adsorption or absorption (e.g., with powdered lime or kitty litter), or melting.
- **Volatile liquids.** Volatile liquid contaminants can be removed from PPE by applying steam jets to cause the contaminants to evaporate, followed by a water rinse. **The vaporized chemicals pose an inhalation hazard, thus this method must be used with caution.**

5.3.2 Chemical Removal

Reusable PPE typically requires more extensive decontamination than gross decontamination before being put back into service. The methods listed below do not apply to single-use items, as they would be disposed of before this stage. **PPE decontamination with chemicals must be undertaken only under the supervision of an industrial hygienist or another qualified safety and health professional, and in accordance with the equipment manufacturer recommendations.**

- **Solvents to dissolve contaminants.** The selected solvent must not damage the PPE. For example, CPC made with organic materials is readily degraded by organic solvents, such as alcohols, ethers, ketones, and common commercial petroleum products. Halogenated solvents are toxic and incompatible with most types of PPE and must be used only when other solvents are ineffective.
- **Surfactants.** Surfactants prevent recontamination by minimizing adhesion of contaminants. Common surfactants such as household detergents can be used with organic solvents to improve the effectiveness of removal.
- **Rinsing.** Continuous rinsing with large volumes of solution can be very effective in removing contaminants.
- **Disinfection/sanitization.** Although chemical sanitizers are a practical means of inactivating infectious agents, standard sterilization techniques are generally impractical for large equipment and PPE. For this reason, disposable PPE is recommended for use with infectious agents.

Appendix K provides information on commonly used decontamination solutions for specific types of chemical and biological contaminants. PPE suppliers or manufacturers can also provide information on decontamination methods appropriate for their products.

5.4 Measuring Decontamination Effectiveness

The Onsite Safety Officer (or another designated person) is responsible for determining whether reusable PPE is adequately decontaminated before allowing it to return to service or returning it to EPA for storage. The following tests can be used to assess the effectiveness of the decontamination methods (by screening or measuring for chemical residues) as well as damage to PPE. The tests range from simple visual inspections to relatively sophisticated laboratory analysis.

- **Visual inspection** can identify signs of damage such as stains, corrosion, etc. This method cannot, however, determine whether decontamination was effective in removing matrix or permeated contaminants (see Text Box 8). UV light can be used to aid visual detection of some contaminants, such as polycyclic aromatic hydrocarbons (PAHs), due to UV fluorescence.
- **Wipe testing** can be used to detect any residual surface decontamination on skin or PPE. Cloth or paper patches are wiped over predetermined surface areas and are then analyzed in a laboratory. The cost and time for laboratory analysis limit the usefulness of this method.
- **Commercial kits** are available for testing the effectiveness of surface decontamination for a limited number of chemicals. Surface and skin wipes provide a colorimetric, real-time indication of the presence of trace amounts of certain chemicals.
- **Immunoassay kits** can provide qualitative information on site, within an hour, for a variety of pesticides and other toxic chemicals.
- **Permeation testing** is used to detect CPC contamination, particularly low-volatility chemical contamination. Pieces of the protective garments must be analyzed by a laboratory. In the event that several suits are similarly contaminated, a single representative garment can be subjected to the destructive testing by the laboratory.
- **Laboratory analysis of the final rinse solution** can provide a qualitative indication of whether additional decontamination is necessary, based on the presence of high levels of contaminants in the solution.
- **Photoionization or flame ionization detectors** are sensitive air-monitoring instruments that can indicate inadequate decontamination by detecting "hot spots" or high residual contaminant levels on PPE.

5.5 Reuse of Decontaminated PPE

The HSPC, Onsite Safety Officer, or Equipment Manager (or another designated person) must determine if the decontaminated PPE can safely be reused. Reuse may be possible if:

- No "significant" exposures have occurred, based on permeation rates and contaminant toxicity.
- Decontamination methods have been successful in reducing contamination levels to safe or acceptable concentrations, based on the tests described in Section 5.4 above.
- The physical integrity of the CPC has not been compromised.

5.6 Decontamination Equipment

The Onsite Safety Officer or Equipment Manager (or another designated person) must ensure that adequate decontamination equipment is available for each type of operation. When selecting decontamination equipment, the responsible person must consider whether the equipment itself is

disposable or easily decontaminated for reuse. The following equipment is recommended for decontaminating workers and PPE:

- Plastic drop cloths for storing heavily contaminated equipment and outer protective clothing.
- Drums or suitably lined trash cans for storing disposable clothing and heavily contaminated reusable PPE that must be discarded, and for storing contaminated solutions.
- Lined boxes with absorbents for rinsing off solid or liquid contaminants.
- Garden sprayers to apply decontamination solutions to CPC that produce relatively low-volume runoff.
- Washing and rinsing solutions selected to reduce contamination and the hazards associated with contaminants.
- Large galvanized tubs, stock tanks, or children's wading pools to hold wash and rinse solutions. These must be at least large enough to accommodate decontamination of the target PPE item (e.g., a worker to place one or both booted feet inside) and must have either no drain or be connected to a collection tank or appropriate treatment system.
- Plastic sheeting, sealed pads with drains, or other appropriate methods for containing and collecting contaminated wash and rinse solutions spilled during decontamination.
- Long-handled, soft-bristled brushes to help wash and rinse off contaminants.
- Paper or cloth towels for drying protective clothing and equipment.
- Colored tarps and signs to distinguish station divides and to guide workers through decontamination stations.
- Soap or wash solution, wash cloths, and towels for workers.
- PVC piping for temporary showers. For longer-term field actions, shower facilities for full body wash, or, at a minimum, personal wash sinks (with drains connected to a collection tank or appropriate water treatment system); also, lockers and cabinets for storage of decontaminated clothing and equipment.

5.7 PPE Disposal

The Onsite Safety Officer or Equipment Manager (or another designated person) is responsible for overseeing the safe disposal of all wastes generated from decontaminating PPE, including single-use and excessively contaminated reusable PPE. All decontamination equipment must be decontaminated and/or disposed of properly. Buckets, brushes, tools, and other contaminated equipment must be collected, placed in containers, and labeled appropriately for transport and disposal, according to EPA and U.S. Department of Transportation (DOT) regulations and applicable state and local requirements.

PPE must be placed in containers, labeled, and prepared for disposal separately from other forms of waste. Incompatible materials must be segregated. Reusable CPC that is not completely decontaminated must be placed in plastic bags, pending further decontamination and/or disposal.
All spent solutions and wash water must be collected and disposed of or treated properly. Since significant amounts of water may be used for decontaminating workers and their PPE, a sufficient supply of containers must be provided.

6.0 RECORDKEEPING

EPA's recordkeeping goal is to ensure that nationally consistent, readily accessible records are maintained at each EPA organization. Table 9 provides details about the specific recordkeeping requirements that must be followed, who is expected to complete specific forms, and who must retain copies of the records.

Table 9
PPE Record Retention Requirements[a]

Required Record	Specified Form	Completed By[b]	Retained By[b]
Organization's written PPE program[d]	Customized version of this chapter	• SHEMP Manager • Removal Manager • HSPC	• SHEMP Manager • HSPC
Site-specific PPE procedures for HASPs[d]	Incorporated into site-specific HASP	Emergency responders	• Emergency responders • Site file
Site-specific PPE hazard assessment form and certification[e] of hazard assessment	Appendix E (Sample site hazard assessment and certification form), which may be incorporated into the HASP	Emergency responders	• Removal Manager • HSPC • Emergency responders • Site file
Records related to procurement, inspection, and maintenance of PPE	"Forms" section of the manual's website (Sample inspection checklist)	• HSPC • Equipment Manager • Region 4 Readiness Center Contractors	• Equipment Manager • Region 4 Readiness Center Contractors
Records related to PPE training[e]	Certification of completion of HAZWOPER 40-hour or 8-hour refresher course	• Course instructor • SHEMP Manager • HSPC	Individual employees[c]

[a] See the manual's Respiratory Protection Program chapter for respiratory protection equipment recordkeeping requirements.
[b] The delegation of recordkeeping responsibilities presented in this table reflects the chapter authors' opinions. The assignments have been made with regional audiences in mind; the positions listed might not be applicable for OLEM special teams and HQ. Users can adjust the assignments when they go through the process of customizing this chapter.
[c] Employees must provide documentation certifying the completion of their training requirements to the SHEMP Manager or HSPC (or another designated person), who in turn will document it in the FRM.
[d] Recordkeeping required by OSHA 29 CFR 1910.120.
[e] Recordkeeping required by OSHA 29 CFR 1910.132.

APPENDIX A

Personal Protective Equipment Program: Designation of Roles and Responsibilities

Instructions for Users

Appendix A provides a place for users to insert organization-specific information into the PPE Program chapter. This appendix presents a list of tasks that must be performed to ensure the proper operation of a PPE program. The tasks are listed in rows. EPA position titles (e.g., the SHEMP Managers or the Health and Safety Program Contact) are listed in columns. Each task has been assigned a default position. For some of the tasks, check marks have been placed in two or more columns to indicate that more than one person is responsible for that task. **Please note that users can re-delegate tasks.**

Users must take the following steps to customize Appendix A:

- Fill in the background information requested at the top of page A-3. For example, indicate when the table is being updated and who is doing the updating.
- Fill in actual names under the position titles.
- Add additional key players to the table (if necessary). *Note: The chapter authors have already provided a placeholder to add a new position, as the last column is labeled "Other." Users should customize this column to identify the position title (and name) of any additional key player assigned responsibility to implement this chapter. Users can insert more columns to include additional key players (if necessary).*
- Add rows to the table (if necessary) to provide information about activities that exceed the minimum requirements already included in Appendix A. (See Appendix B for a list of your organization's additional policies and procedures related to PPE.)
- Determine whether any of the recommended task assignments must be delegated to another person. (If so, move the check marks to re-assign the task.)
- Ensure that each task has been assigned.

ATTENTION OLEM Special Teams and HQ Users: The tasks and position titles that appear in Appendix A have been written with regional audiences in mind. OLEM special teams and HQ users should modify the language that appears in the rows and column headers to reflect the needs of their organization.

APPENDIX A
Task Table for Implementing a PPE Program

This table has been customized for: Region 4.
Last Updated on: March 3, 2017.
Updated by: Kevin Eichinger.

TASKS ▼ / ROLES ►	Who Is Responsible for Each Task or Action?							
	Removal Manager	**SHEMP Manager**	**Health and Safety Program Contact**	**Onsite Safety Officer**	**Emergency Responders***	**Medical Monitor**	**Equipment Manager**	**Other**
Name of person in role ►	See Appendix A-2 in the Introduction chapter for the names of personnel that fill these roles.							
General Tasks								
1. Ensure that procedures outlined in the PPE Program chapter are being followed by all responsible parties. Support initiatives related to PPE that the SHEMP Manager establishes.	✓							
2. Serve as the organization's technical expert (or establish a link to a technical expert) on PPE.		✓	✓					
3. Implement the PPE Program chapter by: (1) customizing the chapter with organization-specific information, (2) reviewing/updating the customized version annually, and (3) adopting the requirements and practices in the chapter. Post the customized chapter to the manual's website and inform stakeholders of its availability.	✓	✓	✓	✓	✓			
4. To ensure readiness, maintain a list of Level A-qualified individuals who are fully trained to use Level A equipment, medically qualified to wear such equipment, and compliant with requirements to exercise two or more times per year wearing full Level A equipment.	✓	✓						
Tasks Associated with Onsite Medical Monitoring (Section 3.1)								
5. Determine whether onsite medical monitoring is necessary (see Section 4.2.1 of the manual's Physical Stress Management Program chapter). If monitoring is necessary, make arrangements for a trained Medical Monitor (see glossary for a definition) to measure vital signs on site.			✓	✓				
6. If onsite medical monitoring is necessary, establish a checkpoint for employees to go through when entering/exiting the work zone. Alert employees, their immediate supervisors, and the Onsite Safety Officer if monitoring results suggest an employee is overly taxed due to PPE use.						✓		

TASKS ▼ / ROLES ►	Who Is Responsible for Each Task or Action?							
	Removal Manager	SHEMP Manager	Health and Safety Program Contact	Onsite Safety Officer	Emergency Responders*	Medical Monitor	Equipment Manager	Other
Name of person in role ►	See Appendix A-2 in the Introduction chapter for the names of personnel that fill these roles.							
Tasks Associated with PPE Training (Section 3.2)								
7. Ensure that emergency responders receive PPE training. (*Note: PPE training should be incorporated into the HAZWOPER 40-hour training and 8-hour refresher training. The SHEMP Manager [or another designated person] will determine whether the training provides adequate coverage of PPE topics.*)		✓	✓					
8. Attend and complete PPE training.			✓	✓	✓			
9. Prevent employees from working in the field if they have not completed PPE training. Provide the resources (including time and monetary support) needed to ensure successful completion of training courses.	✓							
Tasks Associated with PPE Inspection, Cleaning, Maintenance, and Storage (Section 3.3)								
10. Perform inspection, cleaning, and maintenance of PPE as described in Sections 3.3.1 and 3.3.2.			✓		✓		✓	
11. Specify procedures for storing PPE, as described in Section 3.3.3 of the PPE Program chapter.		✓					✓	
12. Maintain PPE inspection and maintenance records, as described in Section 3.3.4.				✓			✓	
Tasks Associated with PPE Fitting, Donning, and Doffing (Section 3.4)								
13. Ensure that every emergency responder is provided with individualized respirator fit testing. (See the manual's Respiratory Protection Program chapter.)	✓	✓	✓					
14. Ensure that site-specific donning and doffing procedures for different types of PPE, including ensembles, are addressed, and that responders receive protective ensembles that fit properly.				✓				
15. Before going into the field, check to make sure one's PPE, especially protective clothing, is worn correctly and fits properly.					✓			
16. Comply with exact procedures for removing contaminated PPE. (See Appendix J.)					✓			
Tasks Associated with Controlling Hazards Associated with PPE Use (Section 3.5)								
17. Ensure that site-specific procedures for controlling PPE hazards are addressed, and that these procedures are implemented on site.			✓	✓				
18. Report any problems, symptoms, or signs of PPE failure (see list in Section 3.5) to your supervisor, the Onsite Safety Officer, or the Medical Monitor.					✓			

TASKS ▼ / ROLES ►	Who Is Responsible for Each Task or Action?							
	Removal Manager	SHEMP Manager	Health and Safety Program Contact	Onsite Safety Officer	Emergency Responders*	Medical Monitor	Equipment Manager	Other
Name of person in role ►	See Appendix A-2 in the Introduction chapter for the names of personnel that fill these roles.							
Tasks Associated with PPE Selection (Section 4.0)								
19. Complete a site-specific hazard assessment and certification of the hazard assessment (Appendix E).				✓	✓			
20. Coordinate the selection and distribution of PPE for emergency responders and ensure that the selected PPE is appropriate for the site hazards, based on the hazard assessment.			✓	✓				
Tasks Associated with PPE Decontamination (Section 5.0)								
21. Develop the site-specific PPE decontamination plan and ensure it is implemented.				✓				
22. Select the appropriate level and method(s) of PPE decontamination, as described in Section 5.3.				✓				
23. Develop and enforce site-specific standard operating procedures (SOPs) for decontamination.				✓				
24. Determine whether reusable PPE is adequately decontaminated before allowing it to return to service. (See Section 5.5.)			✓	✓			✓	
25. Ensure that adequate decontamination equipment is available for each type of operation.				✓				
26. Ensure that decontamination line assistants are provided with suitable PPE.				✓				
27. Maintain logs that document PPE exposure, decontamination performed, and inspection results.				✓			✓	
28. Oversee the safe disposal of all wastes generated after decontamination.				✓				
Tasks Associated with Recordkeeping Activities (Section 6.0)								
29. Retain certification documenting that you have completed PPE training. (*Note: PPE training should be incorporated into HAZWOPER 40-hour training and 8-hour refresher training.)*					✓			
30. Track the completion of employees' PPE training requirement in FRM. Ensure that the Removal Manager or supervisor is aware of which employees have/have not completed their training requirements.	✓	✓	✓					
31. Retain records related to procurement, inspection, and maintenance of PPE.			✓				✓	
32. Retain copies of required site-specific documentation, including hazard assessments.	✓		✓	✓				
Additional Tasks That Reflect Organization-Specific Procedures (Appendix B)								
Attention users: Add rows if necessary.								

*Note: A list of the organization's emergency responders is provided in Appendix A-2 of the Introduction chapter.

APPENDIX B

Personal Protective Equipment Program: Documentation of Additional Policies and Procedures

The procedures and tasks outlined in the PPE Program chapter represent the **minimum requirements** that each EPA organization must meet. If organizations advocate the use of additional policies and procedures, they must document them in the table below. After doing so, they must also:

- Ensure that any of the additional policies and procedures that are added to the table below are also addressed in the main text of the PPE Program chapter. This can be accomplished by either (1) inserting the additional policies and procedures directly into the relevant portions of the main body of the chapter or (2) adding a sentence within the main text that directs readers to Appendix B for more information.
- Update Appendix A to capture any additional tasks that are listed in the table below and ensure that each task is assigned to a specific individual.

Topic	**Please document the additional elected policies and procedures required for Region 4 here.**
Section 3.1 **Onsite Medical Monitoring**	See R4 ERRB Standard Operating Guidelines at https://response.epa.gov/hsmanualregion4 1. SOG D101: Level A, B, C and D+, Personnel Decontamination 2. SOG D102: Radiation Personnel Decontamination 3. SOG D103: Equipment Decontamination 4. SOG D104: Hydrofluoric Acid Decontamination and Emergency Procedures 5. SOG P100: Personal Protective Equipment Guidelines for Specific Activities/Tasks 6. SOG P101A: Level A Chemical Protective Clothing Dress-Out 7. SOG P101B: Level B Chemical Protective Clothing Dress-Out 8. SOG P101C: Level C and D+ Chemical Protective Clothing Dress-Out 9. SOG P104: Fall Arrest Equipment 10. SOG P105: Personal Flotation Devices (PFDs)/Life Jackets
Section 3.2 **PPE Training**	
Section 3.3 **PPE Inspection, Cleaning, Maintenance, and Storage**	
Section 3.4 **Fitting, Donning, and Doffing PPE**	
Section 3.5 **Controlling Hazards Associated with PPE Use**	
Section 4.0 **PPE Selection**	
Section 5.0 **PPE Decontamination**	
Section 6.0 **Recordkeeping**	
Other topics _____ _____	

APPENDIX C

Glossary

GLOSSARY

Administrative control
A hazard control that involves administrative measures such as modifying work practices (e.g., shorter workshifts) and implementing management policies and training programs.

Air-purifying respirator
A respirator with an air-purifying filter, cartridge, or canister that removes specific air contaminants by passing ambient air through the air-purifying element.

Atmosphere-supplying respirator
A respirator that supplies the respirator user with breathing air from a source independent of the ambient atmosphere, and includes supplied-air respirators (SARs) and self-contained breathing apparatus (SCBA) units.

Degradation
The loss of or change in a fabric's chemical resistance or physical properties due to exposure to chemicals, use, or ambient conditions (e.g., sunlight).

Doff
To take off or remove (e.g., PPE).

Don
To put on, in order to wear (e.g., PPE).

Engineering control
A hazard control that involves design changes to equipment, installing equipment (e.g., local exhaust ventilation), or modifying work methods.

Filtering facepiece respirator
A negative pressure particulate respirator with a filter as an integral part of the facepiece or with the entire facepiece composed of the filtering medium.

Heat stress
The net heat load to which a worker may be exposed, based on a combination of factors including work load, environmental factors (e.g., air temperature and movement, humidity, radiant heat exchange), and clothing.

Heat stroke
An acute medical emergency arising from exposure to heat, an excessive rise in body temperature, and failure of the body's temperature regulating mechanism. Body temperature may rise to 106ºF or higher within 10 to 15 minutes. Heat stroke can cause death or permanent disability if emergency treatment is not provided. The warning signs of heat stroke vary but may include an extremely high body temperature (above 103ºF); red, hot, and dry skin (no sweating); rapid, strong pulse; throbbing headache; dizziness; nausea; confusion; and unconsciousness.

Medical Monitor
A Medical Monitor must be a competent health and safety professional (e.g., a local emergency medical technician [EMT], a nurse, or a nurse assistant) who knows how to measure and interpret vital signs, recognize the symptoms of physical stress-related disorders, and monitor work/rest cycles.

Permissible exposure limit (PEL)
PELs are occupational exposure limits for chemical and physical agents established by the Occupational Safety and Health Administration (OSHA). OSHA PELs are legally enforceable.

Permeation
The process by which a chemical dissolves in and/or moves through a protective clothing material on a molecular level.

Penetration
The movement of chemicals through zippers, stitched seams, or defects (e.g., pinholes) in a protective clothing material.

Powered air-purifying respirator (PAPR)
An air-purifying respirator that uses a battery-powered blower to force the ambient air through air-purifying elements to the inlet covering.

Recommended exposure limit (REL)
RELs are occupational exposure limits for chemical and physical agents established by the National Institute for Occupational Safety and Health (NIOSH). RELs are recommended exposure limits and do not have the force of law (unless enacted into law by OSHA or a state with a state-run occupational safety and health plan).

Self-contained breathing apparatus (SCBA)
A type of atmosphere-supplying respirator in which the source of air is a cylinder of compressed air that is carried by the wearer.

Short-term exposure limit (STEL)
An airborne concentration of a substance to which workers are permitted to be exposed for a short duration, usually 15 minutes. STELs are published and enforced by OSHA.

Supplied-air respirator (SAR)
A respirator that provides breathing air through an airline hose from an uncontaminated decompressed air source to the facepiece. The facepiece can be a hood, helmet, or tight-fitting facepiece.

Threshold limit value (TLV)
TLVs are occupational exposure limits for chemical and physical agents established by the American Conference of Governmental Industrial Hygienists (ACGIH). TLVs are intended for use only as guidelines or recommendations and do not have the force of law (unless enacted into law by OSHA or a state with a state-run occupational safety and health plan).

Time-weighted average (TWA)
TWA refers to an exposure that has been weighted for a certain time duration. An 8-hour TWA represents the average exposure measured over 8 hours.

APPENDIX D

PPE Training Sample Test Questions

PPE Training Sample Test Questions

1. List the tasks that require the use of PPE during your work.

2. For each task, list the associated hazards and the type of PPE required.

3. List potential problems and hazards caused by PPE use.

4. Describe procedures for the use and care of the PPE issued to you.

5. Describe how to check your PPE to make sure it is in good working order.

6. What should you do if you find that your PPE is defective or damaged?

7. How will you dispose of single-use PPE after working at an emergency response site?

APPENDIX E

Sample Site Hazard Assessment and Certification for PPE Selection

U.S. Environmental Protection Agency (EPA)
Organization Name
Street Address
City, State, and Zip Code

SUBJECT: CERTIFICATION OF HAZARD ASSESSMENT FOR PPE SELECTION
(Use attached table to perform site-specific hazard assessment)

Date of assessment: _____

Location: _____

Task/operation:_____

Person certifying assessment: _____**Title:**_____

SITE-SPECIFIC HAZARD ASSESSMENT FOR PPE SELECTION

Task/operation_____Location_____Performed by_____ Date_____

Protection Site	Hazard Source/Activity	Type of Hazard	Type of PPE Required	Notes/Comments
Eyes and Face Refer to Appendix F-1.		☐ Impact-flying objects, chips, sand, or dirt	☐ Safety glasses w/side shields ☐ Goggles w/face shield shields	
		☐ Nuisance dust	☐ Unvented chemical goggles	
		☐ Splashing molten metal	☐ Safety goggle w/face shield	
		☐ Hot sparks-grinding	☐ Safety glasses w/side shields ☐ Safety goggles w/face shield	
		☐ Glare/high intensity lights	☐ Shaded safety glasses	
		☐ UV light: welding, cutting, torch brazing, or soldering	☐ Welding goggles ☐ Welding helmet/shield w/safety glasses and side shields	
		☐ Laser operations	☐ Laser goggles or glasses	
		☐ Chemical – splashing liquid	☐ Chemical goggles/face shield	
		☐ Chemical – irritating mists	☐ Unvented chemical goggles	
		☐ Other:	☐ PPE required:	

Protection Site	Hazard Source/Activity	Type of Hazard	Type of PPE Required	Notes/Comments
Head Refer to Appendix F-2		☐ Object from overhead	☐ Type 1 ANSI Z89.1-1997 [or later edition]	
		☐ Impact to side of head	☐ Type 2 ANSI Z89.1-1997 [or later edition]	
		☐ Struck by falling object ☐ Struck against fixed object ☐ Electrical contact with exposed wires/conductors ☐ Special circumstances – no electrical protection	Hard Hat Class: ☐ Class A/G ☐ Class B/E ☐ Class C	
		☐ Hair entanglement, open flames	☐ Cap, hairnet, bandana	
		☐ Other:	☐ PPE required:	
Hands Refer to Appendix F-3		☐ Penetration - sharp objects	☐ Leather/cut resistant gloves	
		☐ Penetration – animal bites	☐ Leather/cut resistant gloves	
		☐ Penetration – rough objects	☐ General purpose work gloves	
		☐ Penetration – knives	☐ Metal mesh, Kevlar, steel mesh, heavy leather	
		☐ Extreme cold ☐ Extreme heat	☐ Insulated gloves ☐ Heat/flame resistant gloves	
		☐ Electrical shock	☐ Insulated rubber gloves Type: ☐ Plastic ☐ Cotton ☐ Nylon	
		☐ Chemicals	☐ Chemical resistant gloves Type:	
		☐ Other:	☐ PPE required:	

Protection Site	Hazard Source/Activity	Type of Hazard	Type of PPE Required	Notes/Comments
Feet and Legs Refer to Appendix F-4		☐ Impact-heavy objects	☐ Steel toe safety shoes	
		☐ Compression-rolling or pinching objects/vehicles	☐ Leather boots or safety shoes with metatarsal (top of foot) guards	
		☐ Slippery or wet surfaces	☐ Slip resistant soles	
		☐ Penetration-sharp objects	☐ Puncture resistant soles	
		☐ Penetration-chemical	☐ Chemical resistant boots/covers	
		☐ Splashing-chemical	☐ Rubber boots/closed top shoes	
		☐ Splashing-molten metal	☐ Heat resistant boots and leggings	
		☐ Sparks-welding	☐ Heat resistant boots and leggings	
		☐ Exposure to extreme cold	☐ Insulated boots or shoes	
		☐ Chemical	☐ Chemical protective boots or shoes	
		☐ Other:	☐ PPE required:	

Protection Site	Hazard Source/Activity	Type of Hazard	Type of PPE Required	Notes/Comments
Body Refer to Appendix F-5		☐ Impact-flying objects	☐ Long sleeves/apron/coat	
		☐ Moving vehicles	☐ Traffic vest	
		☐ Penetration-sharp objects	☐ Cut-resistant sleeves, wristlets	
		☐ Penetration-knives	☐ Metal mesh, Kevlar, steel mesh, heavy leather sleeves, wristlets, aprons	
		☐ Electrical-static discharge	☐ Static control coats/coveralls	
		☐ Hot metal or sparks/welding	☐ Flame-resistant jacket/pants, aluminized jacket/pants	
		☐ Poor visibility/need for high visibility	☐ High visibility vests	
		☐ Working over/near water	☐ Life jackets/flotation vests (U.S. Coast Guard-approved)	
		☐ Chemical(s) ☐ Biological agent(s) ☐ Radiological agent(s)	Chemical protective ensemble Type: ☐ Disposable Tyvek suit ☐ Coveralls ☐ Street clothes ☐ Other:	
		☐ CBRN	☐ CBRN Protective Ensemble Type: ☐ Other:	
		☐ Other:	☐ PPE required:	

Protection Site	Hazard Source/Activity	Type of Hazard	Type of PPE Required	Notes/Comments
Lungs/ Respiratory Refer to the manual's Respiratory Protection Program chapter, Appendix E (Hazard Evaluation Form) and Appendices F-4 through F-7		☐ Particulates ☐ Chemical ☐ Biological ☐ CBRN ☐ Confined space/oxygen deficient ☐ Welding	***Air-Purifying*** ☐ Negative pressure full facepiece ☐ PAPR tight-fitting full facepiece, continuous flow mode Brand/model: Cartridges: Cartridge change-out schedule: ***Atmosphere-supplying*** ☐ SCBA: Tight-fitting full facepiece, positive pressure open-circuit mode ☐ Supplied air (airline): Tight-fitting full facepiece, connected to an appropriate cascade system Brand/model:	
		☐ Other:	☐ Respirator required:	
Fall Refer to Appendix F-6		☐ Unprotected elevated walking/working surface	☐ Body harness and lanyard	
		☐ Other:	☐ PPE required:	
Noise See also the manual's Physical Stress Management Program chapter		☐ High-noise environment ☐ High-noise machines/tools	☐Ear muffs Specify type: ☐Ear plugs Specify type:	
		☐ Other:	☐ PPE required:	

APPENDIX F

PPE Selection Procedures[a]

F-1 **Eye and Face Protection**
F-2 **Head Protection**
F-3 **Hand Protection**
F-4 **Foot Protection**
F-5 **Protective Clothing and Ensembles**
F-6 **Fall Protection**

[a] The information in Appendix F came from OSHA resources such as the section on PPE in the OSHA Technical Manual, the OSHA booklet on PPE (https://www.osha.gov/Publications/osha3151.pdf), and OSHA's Non-mandatory Compliance Guidelines for Hazard Assessment and Personal Protective Equipment Selection.

APPENDIX F-1

Eye and Face Protection

Selection and use of eye and face protection must comply with OSHA requirements in 29 CFR 1910.133. Eye and face protection must also conform to certain consensus standards established by the American National Standards Institute (ANSI). OSHA's Eye and Face Protection eTool can assist in the selection of appropriate eye and face protection.

Compliance with National Consensus Standards
Eye and face protection used by emergency responders must meet the following ANSI standards:

- Eye and face protective device purchased before July 5, 1994, must comply with the ANSI Z87 .1-1968 "USA Standard for Occupational and Educational Eye and Face Protection."
- Protective eye and face devices purchased after July 5, 1994, must comply with ANSI Z87.1-1989, "American National Standard Practice of Occupational and Education Eye and Face Protection" or a subsequent edition.

Note: These standards do not apply to hazards from X-rays, gamma rays, high-energy particulate radiation, microwaves, radio-frequency radiation, or work with lasers and masers.

General Requirements
Emergency responders must use appropriate protection when exposed to eye or face hazards from flying particles, molten metal, acids or caustic liquids or other liquid chemicals, chemical gases or vapors, or potentially hazardous light radiation. The following requirements apply to eye and face protection:

- Use eye protection that provides side protection when there is a hazard from flying objects. Detachable side protectors (e.g., clip-on or slide-on shields) are acceptable if they meet ANSI requirements.
- Use eye protection with filter lenses that have a shade number appropriate for the work being performed in the presence of potentially injurious light radiation. Tinted and shaded lenses are not filter lenses unless they are marked or identified as such.
- Face shields must be worn over primary eye protection (safety glasses or goggles) when there is a potential exposure to flying fragments or objects, hot sparks from furnace operations, potential splash from molten metal, or extreme temperatures.
- Face shields must be used in combination with goggles whenever a chemical splash hazard is present.
- Emergency responders who need to wear prescription lenses during operations with potential eye hazards must wear eye protection that either:
  - Incorporates the prescription in its design, or
  - Can be properly worn over the prescription lenses.
- Eye and face PPE must be marked to identify the manufacturer.

Related Requirements
Emergency responders working with corrosive chemicals must have immediate access to eyewash and quick drench facilities.

Types of Eye and Face Protection

Design Type	Description and Use
Safety Glasses/ Spectacles	Protective eyeglasses are made with safety frames, tempered glass or plastic lenses, temples, and side shields that provide protection from moderate impact and particles encountered in tasks such as carpentry, woodworking, grinding, scaling, etc. Prescription safety glasses and tinted lenses are also available. Standard safety glasses are designed to protect against flying particles. Safety glasses have impact-resistant lenses and frames that are far stronger than regular eyeglasses.
Safety Goggles	Vinyl framed goggles with a soft pliable body provide eye protection from many splash, vapor, and impact hazards. These goggles are available with clear or tinted lenses, and perforated, port-vented, or non-vented frames. Corrective single-lens goggles provide similar protection to spectacles and may be worn in combination with spectacles or corrective lenses. **Safety goggles offer the best all-around impact protection because they form a positive seal around the eye area.**
Welders/ Chippers Goggles	Welders and chippers goggles are available in rigid and soft frames to accommodate single or two-eyepiece lenses. *Welders' goggles* provide protection from sparking, scaling, or splashing metals and harmful light rays. Lenses are impact resistant and are available in graduated shades of filtration. *Chippers/Grinders goggles* provide protection from flying particles. The dual protective eyecups house impact resistant clear lenses with individual cover plates.
Face Shields	Face shields consist of an adjustable head gear and face shield of either tinted or transparent acetate or polycarbonate materials, or wire screen. Face shields are available in various sizes, tensile strength, impact/heat resistance, and light ray filtering capacity. Face shields are used in operations requiring full face protection against flying particles, metal sparks, and chemical or biological splash hazards. For these hazards, it is recommended that face shields be worn over primary eye protection (safety glasses or goggles), not alone.
Welding Helmets and Shields	Shield assemblies consist of a vulcanized fiber or glass fiber body, a ratchet or button-type adjustable headgear or cap attachment, and a filter and cover plate holder. These shields protect eyes and face from infrared or radiant light burns, flying sparks, metal spatter and slag chips encountered during welding, brazing, soldering, resistance welding, bare or shielded electrical arc welding, and oxyacetylene work.

Care and Storage of Eye and Face Protection

- Inspect eye and face protection prior to use. Damaged equipment may not be fully protective or impact-resistant.
- Store all eye and face protection carefully to prevent scratches and other damage, away from high heat and sunlight.
- Replace pitted lenses. Lenses that are pitted or deeply scratched limit users' visual ability and are prone to break under impact.
- Clean eye and face protection according to the manufacturer's instructions. Otherwise, soak items in a solution of mild soap and water (maintained at 120 degrees F) for 10 minutes. Rinse thoroughly and allow to air dry.
- Disinfect used protective equipment before reissue. PPE may be disinfected by completely immersing all parts in a solution of germicidal fungicide for 10 minutes. Allow all parts to air dry at room temperature.

Selection Chart for Eye and Face Protection

Type of Hazard	Examples of Hazard	Recommended Protection
Impact	Flying fragments, objects, large chips, particles, sand, dirt, etc.	Spectacles with side protection or goggles. For severe exposure use face shield over primary eye protection.
Heat	Hot sparks	Goggles or spectacles with side protection. For severe exposure use face shield over primary protection.
	Splash from molten metals	Face shields worn over goggles.
	High temperature	Screen face shields, reflective face shields.
Chemicals	Splash	Goggle, eyecup and cover types. For severe exposure, use with face shield.
Dust	Irritating mists	Special-purpose goggles.
	Nuisance dust	Goggle, eyecup, and cover types.
Light and/ or Radiation	Optical radiation	Welding helmets or welding shields.
Welding	Optical radiation	Welding goggles or welding face shield.
Glare	Limited vision	Spectacles or welding face shield. Spectacles with shaded or special-purpose lenses, as suitable.

Notes:

1. Tasks may involve multiple eye and face hazards. Select highest level of protection available. Protective devices do not provide unlimited protection.
2. Operations involving heat may also involve light radiation. When necessary, protection from other hazards must be provided.
3. Face shields should only be worn over primary eye protection (spectacles or goggles).
4. Filter lenses must meet the requirements for shade designations as outlined in the OSHA regulations and ANSI standards. Tinted and shaded lenses are not filter lenses.
5. Responders whose vision requires the use of prescription lenses must wear either protective devices fitted with prescription lenses or protective devices designed to be worn over regular prescription eyewear.
6. Contact-lens wearers must also wear appropriate eye and face protection devices.
7. Caution should be exercised in the use of metal frame protective devices in electrical hazard areas.
8. Atmospheric conditions and the restricted ventilation of the protector can cause lenses to fog. Frequent wiping may be necessary.
9. Welding helmets or faces shields should be used only over primary eye protection (spectacles or goggles).
10. Non-side shield spectacles are available for frontal protection only, but are not acceptable eye protection for the sources and operations listed for "impact."
11. Protection from light radiation is directly related to filter lens density. Select the darkest shade that allows the task to be performed.

APPENDIX F-2

Head Protection

Selection and use of protective headwear must comply with OSHA requirements in 29 CFR 1910.135. Head protection must also conform to certain consensus standards established by the American National Standards Institute (ANSI).

Compliance with National Consensus Standards
Protective headwear used by emergency responders must meet the following ANSI standards:

- Protective helmets purchased before July 5, 1994, must comply with ANSI Z89.1-1969, "American National Standard Safety Requirement for Industrial Head Protection."
- Protective helmets purchased after July 5, 1994, must comply with ANSI Z89.1-1986, "American National Standard for Personnel Protection- Protective Headwear for Industrial Workers- Requirements" or a subsequent edition.
- ANSI Z89.1-1997 eliminated the Type 1 and Type 2 design designations included in the 1986 version (see Table 1). In the 1997 version, "Type" is used to designate whether a helmet provides protection strictly from blows to the top of the head (Type I) or from blows to both the top and sides of the head (Type II). Z89.1-1997 also changed the designations for the classes of electrical performance (see Table 2):
  - Class G (General) Helmets—equivalent to the old Class A. Class G helmets are proof tested at 2,200 volts.
  - Class E (Electrical) Helmets—equivalent to the old Class B. Class E helmets are proof tested at 20,000 volts.
  - Class C (Conductive) Helmets—provide no electrical insulation; the alpha designation did not change from the old standard.

General Requirements
The following general requirements apply to use of head protection:

- Protective helmets must be worn when working in areas where there is a potential for head injury from impact or falling objects.
- Protective helmets designed to reduce electrical shock hazard must be worn when working near exposed electrical conductors that could contact the head.
- Protective helmets with chinstraps must be worn when working at higher elevations. The chinstrap should be designed to prevent the hard hat from being bumped off the user's head, but must not be so strong that it presents a strangulation hazard.
- Bump caps may be used when head (impact) protection is not required, but where there may be exposure to minor head bumps or laceration hazards. Bump caps are not approved for use where impact protection is required.

Types of Head Protection
Head protection used by emergency responders must meet ANSI standards (See Tables 1 and 2). Protective headwear meeting a subsequent edition of the ANSI standard is also acceptable if it can be demonstrated to be as effective as headwear meeting the 1997 edition.

Table 1
Protective Helmet Specifications in ANSI Z89.1-1986

Type 1	Helmets with a full brim.
Type 2	Brimless helmets with a peak extending forward from the crown.
Class A	General service, limited voltage. Intended for protection against impact hazard. Used in mining, construction, and manufacturing. Provides electrical protection from low voltage conductors (proof tested to 2,200 volts).
Class B	Utility service, high voltage. Used by electrical workers and workers potentially exposed to falling objects. Provides electrical protection from high-voltage conductors (proof tested to 20,000 volts).
Class C	Special service, no voltage protection. Designed for lightweight comfort and impact protection. Used in certain construction, manufacturing, refineries, and where there is a possibility of bumping the head against a fixed object. Must not be used around electrical hazards.

Table 2
Protective Helmet Specifications in ANSI Z89.1-1997

Type 1	Helmets providing crown impact protection.
Type 2	Helmets providing lateral impact protection.
Class G	General service, limited voltage. Intended for protection against impact hazard. Used in mining, construction, and manufacturing. Provides electrical protection from low voltage conductors (proof tested to 2,200 volts).
Class E	Utility service, high voltage. Used by electrical workers and workers who also need protection from falling objects. Provides electrical protection from high-voltage conductors (proof tested to 20,000 volts).
Class C	Conductive, no voltage protection. Designed for lightweight comfort and impact protection. Used in certain construction, manufacturing, refineries, and where there is a possibility of bumping the head against a fixed object. This class of helmet must not be used around electrical hazards.

Care and Storage of Head Protection

All protective headwear must be of safe design and construction for the work to be performed and must be maintained in a sanitary and reliable condition.

- Scrub helmet with a mild detergent and rinse in clear water. After rinsing, inspect the shell, straps, and cradle carefully for damage.
- Before each use, visually inspect the shell, cradle, headbands, sweatbands, and accessories for signs of cracks, dents, damage, or wear that might reduce the protection of the device. Any helmet with worn, damaged, or defective parts must be removed from service until the defective part has been replaced per the manufacturer's instructions.
- Tar, paint, oils, and some chemicals can damage the shell, thereby reducing protection. Follow the manufacturer's instructions if tar, paint, or similar material needs to be cleaned from the helmet shell.

- Helmets must be properly worn and maintained to provide adequate protection. Do not:
  - Drill holes for ventilation.
  - Paint or inscribe the helmet.
  - Place stickers on the helmet, since they can hide signs of deterioration in the shell.
  - Allow the helmet to be exposed to extreme temperatures or direct sunlight for long periods of time. For example, do not store your helmet in the back window of your car.
  - Wear the hard hat with the shell tilted to one side.
  - Wear the hat backward.

Service Life

Hard hats do not have a predetermined service life. Both the 1986 and 1997 ANSI Z89.1 standards state that all hard hat components should be inspected daily for signs of dents, cracks, penetration, and any damage due to impact, rough treatment, or wear. Some manufacturers' guidelines suggest replacing the suspension every 12 months and the hard hat after 5 years of use. Any hard hat that fails the visual inspection should be removed from service and repaired or properly discarded.

Ultraviolet (UV) radiation can cause hats made with plastic materials to lose their glossy finish and eventually take on a chalky appearance. Further degradation can cause the shell to start flaking away. Once the effects of UV radiation appear, the hard hat shell must immediately be removed from service and replaced.

APPENDIX F-3

Hand Protection

Selection and use of hand protection must comply with OSHA requirements in 29 CFR 1910.138. According to this standard, glove selection must be based on the performance characteristics of the glove relative to the task(s) to be performed, conditions present, duration of use, and the hazards and potential hazards identified.

General Requirements
Emergency responders must use appropriate hand protection against hazards that include, but are not limited to:

- Hazardous chemicals that can be absorbed through the skin or cause skin irritation, chemical burns, or other skin conditions (e.g., organic solvents and strong acids and bases).
- Tools, equipment, or materials that can cause severe cuts, lacerations, abrasions, punctures, fractures, or amputations.
- Materials or conditions that can cause thermal burns or that expose the employee to harmful temperature extremes.
- Conditions that may expose employees to blood or other potentially infectious materials/agents. (See the manual's Bloodborne Pathogen Exposure Control Plan for more information.)

General Glove Selection and Use Guidelines

- No glove provides protection against all hazards, and commonly available glove materials provide only limited protection against many chemicals.
- Regardless of material or construction, no glove is completely puncture-proof.
- Determine the most appropriate glove for a particular application, how long it can be worn, and whether it can be reused. In many cases, it is more cost-effective to use disposable gloves than to effectively decontaminate reusable gloves (see section below on disposable gloves).
- Select gloves that fit well and provide sufficient dexterity to perform the task.
- Select gloves that can be removed easily, to prevent skin contamination.
- Inspect gloves carefully for discoloration, holes, tears, wear, or other imperfections before each use, and report any damage immediately to a supervisor or other designated person.
- Store gloves at room temperature, never in extreme heat or cold. Depending on the material, some manufacturers may specify storage requirements.
- Contaminated gloves must be disposed of in a manner that will protect employees from exposure to the hazard.

Types of Hand Protection
Table 1 presents information on gloves designed to protect against cuts and abrasions. Table 2 addresses hand protection from temperature extremes. As the tables indicate, some gloves are designed to provide protection against multiple hazards. Further information on selection of chemical-resistant gloves and on disposable gloves is provided below.

Table 1
Cut-Resistant and Abrasion-Resistant Gloves

Glove Type	Protection Provided
Leather	Guards against injuries from abrasions, cuts, extreme temperatures, and welding sparks or burn hazards. May be used in combination with an insulated liner when working with electricity.
Metal Mesh	Protects hands from cuts and scratches from sharp objects such as cutting tools or knives.
Kevlar®	Offers exceptional abrasion and burn resistance.
Aluminized	Insulates hands from intense heat (e.g., during work with molten materials).
Fabric	Protects hands from minimal abrasion hazards, or contact with dirt, grease, or other contaminants. Does not protect against sharp-edged objects, and poses a snag hazard. Disposable. Can function well as glove liners.

Table 2
Temperature-Resistant Gloves

Glove Type	Protection Provided
Leather	Natural insulator; cut- and abrasion-resistant.
Kevlar®	Cut- and abrasion-resistant; withstands temperatures up to 600 degrees F.
Cotton terrycloth	Can be effective at temperatures up to 600 degrees F though dexterity may be a factor.
Cryogenic	Protects against extremely low temperatures (not suitable for immersion in liquid nitrogen or for use near open flames).
Rubber	Protects against cold temperatures (does not stand up well to heat).
Nomex®, Zetex®, and Flextra®	For specific applications, consult manufacturers' literature.

Selection of Chemical-Protective Gloves
The toxic properties of the chemical and the ability of the chemical to penetrate through the glove are the key factors in selecting chemical-resistant gloves. In particular, chemicals that may cause local skin effects and those that may be absorbed through the skin warrant a high level of protection.

ANSI/ISEA 105-2005, American National Standard for Hand Protection Selection Criteria, provides a consistent, numeric-scale method for manufacturers to rate their products against certain chemicals and exposure conditions. These ratings are a useful source of information on glove selection.

As a general rule, any "chemical-resistant" glove can be used for dry powders. For liquid mixtures and formulated products (unless specific test data are available), a glove should be selected on the basis of the chemical component with the shortest breakthrough time, since solvents can carry active ingredients through some glove materials.

Selection of chemical-protective gloves should take into account the following factors:

- Chemical's effects on glove materials, including:
  - **Permeation**−how quickly a chemical will pass through the glove material.
  - **Breakthrough time**−the time it takes for the chemical to pass to the inside of the glove.
  - **Degradation**−how the chemical will affect the physical properties of the glove material upon contact. Degradation can lead to softening, drying, swelling, shrinkage, or other effects that could expose the user to the chemical.
- Frequency and duration of chemical contact.
- Contact involving total hand/arm immersion or splash hazards.
- Concentration of the chemical(s).
- Temperature of the chemical(s).
- Area to be protected (e.g., hand, forearm, or complete arm) (see section below on glove features).
- Requirements for finger or hand dexterity.
- Grip requirements, or how well the glove performs under dry, wet, or oily conditions.
- Whether the glove needs to show a color change if it has become contaminated.
- Thermal protection for handling cryogenic (i.e., very cold) or superheated materials or liquids.
- Size and comfort requirements.

Guidelines for the selection of chemical-resistant gloves are provided in the tables below.

Table 3
Selection Chart for Chemical-Resistant Gloves[a]

Glove Material	Uses	Advantages	Disadvantages
Natural rubber: Highly flexible and conforming material made from a liquid tapped from rubber plants	Bases, alcohol, dilute water solutions; fair protection against aldehydes and ketones	Low cost, good physical properties, and good dexterity.	Poor against oils, grease, and organic chemicals. Frequently imported and may be of poor quality.
Natural rubber blends	Same as natural rubber	Low cost, good dexterity, and better chemical resistance than natural rubber against some chemicals.	Physical properties frequently inferior to natural rubber.
Polyvinyl chloride (PVC): Stiff polymer made softer and more suitable for protective clothing applications by adding plasticizers	Strong acids and bases, salts, other water solutions, and alcohol	Low cost, very good physical properties, medium cost, and medium chemical resistance.	Plasticizers can be stripped; frequently imported and may be of poor quality.
Neoprene: Synthetic rubber having chemical and wear-resistance properties superior to those of natural rubber	Oxidizing acids, aniline, phenol, and glycol ethers	Medium cost, medium chemical resistance, and medium physical properties.	Poor against halogenated and aromatic hydrocarbons.

Glove Material	Uses	Advantages	Disadvantages
Nitrile: Copolymer available in a wide range of acrylonitrile (propane nitrile) contents; chemical resistance and stiffness increases with higher acrylonitrile content	Oils, greases, aliphatic chemicals, xylene, perchloroethylene, and trichloro-ethane; fair against toluene	Low cost, excellent physical properties, and good dexterity.	Poor against benzene, methylene chloride, trichloroethylene, and many ketones.
Butyl: Synthetic rubber with good resistance to weathering and a wide variety of chemicals	Glycol ethers, ketones, and esters	Specialty glove for polar organics.	Expensive and poor against hydrocarbons and chlorinated solvents.
Polyvinyl alcohol (PVA): Water-soluble polymer with exceptional resistance to many organic solvents that rapidly permeate most rubbers	Aliphatics, aromatics, chlorinated solvents, ketones (except acetone), esters, and ethers	Specialty glove, resists a very broad range of organics, and has good physical properties.	Very expensive, water sensitive, and poor protection against light alcohols.
Fluoroelastomer-(Viton®)	Aromatics and chlorinated solvents; also aliphatics and alcohols	Specialty glove for organic solvents.	Extremely expensive, poor physical properties, and poor protection against some ketones, esters, and amines.
Nofoil (Silver Shield®)	Hazardous materials work or work involving multiple chemical hazards	Excellent chemical resistance.	Easily punctures, poor grip, and stiff.

[a] Contact glove supplier or manufacturer for information on glove materials that provide effective protection against specific chemicals.

Table 4 can be used to select the best glove for protection against the listed chemicals. The ratings are abbreviated as follows: VG=very good; G=good; F=fair; P= poor (not recommended). For chemicals marked with an asterisk (*), gloves will provide limited service.

Table 4.
Chemical Resistance Selection Chart for Protective Gloves

Chemical	Neoprene	Latex/Rubber	Butyl	Nitrile
Acetaldehyde*	VG	G	VG	G
Acetic acid	VG	VG	VG	VG
Acetone*	G	VG	VG	P
Ammonium hydroxide	VG	VG	VG	VG
Amy acetate*	F	P	F	P
Aniline	G	F	F	P
Benzaldehyde*	F	F	G	G
Benzene*	P	P	P	F
Butyl acetate	G	F	F	P
Butyl alcohol	VG	VG	VG	VG
Carbon disulfide	F	F	F	F
Carbon tetrachloride*	F	P	P	G
Castor oil	F	P	F	VG
Chlorobenzene*	F	P	F	P
Chloroform*	G	P	P	F
Chloronaphthalene	F	P	F	F
Chromic acid (50%)	F	P	F	F
Citric acid (10%)	VG	VG	VG	VG
Cyclohexanol	G	F	G	VG
Dibutyl phthalate*	G	P	G	G
Diesel fuel	G	P	P	VG
Diisobutyl ketone	P	F	G	P
Dimethylformamide	F	F	G	G
Dioctyl phthalate	G	P	F	VG
Dioxane	VG	G	G	G

Epoxy resins, dry	VG	VG	VG	VG
Ethyl acetate*	G	F	G	F
Ethyl alcohol	VG	VG	VG	VG
Ethyl ether*	VG	G	VG	G
Ethylene dichloride*	F	P	F	P
Ethylene glycol	VG	VG	VG	VG
Formaldehyde	VG	VG	VG	VG
Formic acid	VG	VG	VG	VG
Freon 11	G	P	F	G
Freon 12	G	P	F	G
Freon 21	G	P	F	G
Freon 22	G	P	F	G
Furfural*	G	G	G	G
Gasoline, leaded	G	P	F	VG
Gasoline, unleaded	G	P	F	VG
Glycerin	VG	VG	VG	VG
Hexane	F	P	P	G
Hydrazine (65%)	F	G	G	G
Hydrochloric acid	VG	G	G	G
Hydrofluoric acid (48%)	VG	G	G	G
Hydrogen peroxide (30%)	G	G	G	G
Hydroquinone	G	G	G	F
Isooctane	F	P	P	VG
Kerosene	VG	F	F	VG
Ketones	G	VG	VG	P
Lacquer thinners	G	F	F	P
Lactic acid (85%)	VG	VG	VG	VG
Lauric acid (36%)	VG	F	VG	VG
Lineolic acid	VG	P	F	G
Linseed oil	VG	P	F	VG
Maleic acid	VG	VG	VG	VG
Methyl alcohol	VG	VG	VG	VG
Methylamine	F	F	G	G
Methyl bromide	G	F	G	F
Methyl chloride*	P	P	P	P

Methyl ethyl ketone*	G	G	VG	P
Methyl isobutyl ketone*	F	F	VG	P
Methyl metharcrylate	G	G	VG	F
Monoethanolamine	VG	G	VG	VG
Morpholine	VG	VG	VG	G
Naphthalene	G	F	F	G
Napthas, aliphatic	VG	F	F	VG
Napthas, aromatic	G	P	P	G
Nitric acid*	G	F	F	F
Nitric acid, red and white fuming	P	P	P	P
Nitromethane (95.5%)*	F	P	F	F
Nitropropane (95.5%)	F	P	F	F
Octyl alcohol	VG	VG	VG	VG
Oleic acid	VG	F	G	VG
Oxalic acid	VG	VG	VG	VG
Palmitic acid	VG	VG	VG	VG
Perchloric acid (60%)	VG	F	G	G
Perchloroethylene	F	P	P	G
Petroleum distillates (naphtha)	G	P	P	VG
Phenol	VG	F	G	F
Phosphoric acid	VG	G	VG	VG
Potassium hydroxide	VG	VG	VG	VG
Propyl acetate	G	F	G	F
Propyl alcohol	VG	VG	VG	VG
Propyl alcohol (iso)	VG	VG	VG	VG
Sodium hydroxide	VG	VG	VG	VG
Styrene	P	P	P	F
Styrene (100%)	P	P	P	F
Sulfuric acid	G	G	G	G
Tannic acid (65)	VG	VG	VG	VG
Tetrahydrofuran	P	F	F	F
Toluene*	F	P	P	F
Toluene diisocyanate (TDI)	F	G	G	F

Disposable Gloves
Disposable gloves are typically discarded after a single wearing, and are not designed to provide long-term chemical protection. Common disposable glove materials include:

- **Fabric—**usually cotton or nylon. Function well as glove liners, not chemical resistant.
- **Nitrile—**resistant than latex or vinyl; offers good dexterity, elasticity, and abrasion resistance; and conforms well to the shape of the hand.
- **Latex—**offers dexterity and conformity, but should only be used in situations involving minimal chemical handling or contact. Causes allergic reactions in some people.
- **Polyethylene—**generally loose fitting and provides a high degree of dexterity.
- **Vinyl—**less flexible than latex, but offers a looser, less binding fit, and somewhat better chemical resistance than latex.

Other Glove Features
Other glove features that should be considered when selecting hand protection are as follows:

Glove Linings: Glove linings tend to improve comfort by absorbing perspiration, but may decrease dexterity.

- **Unlined** gloves offer greater sensitivity and dexterity.
- **Flock** linings, or linings of shredded fibers, improve absorption of perspiration.
- **Knit** linings absorb perspiration, and may improve temperature protection.
- **Jersey** linings are generally more comfortable and provide better cushioning than other linings.
- **Foam** linings may be used to improve temperature protection for hot or cold conditions.
- **Wool** linings are natural insulators used outdoors for warmth in cold temperatures.

Glove length:

- **Finger cots**—worn on the fingers alone when only minimal protection is required.
- **Wrist length** (9-14 inches)—protects both the hand and wrist from exposure.
- **Elbow length** (14-18 inches)—provide protection if the hand must be immersed in a liquid or extra splash protection is needed, and also shields the forearm from heat hazards, abrasions, or chemicals.
- **Shoulder length** (30-31 inches) —protects the entire hand and arm.

Cuff style:

- **Rolled cuff**—provides a barrier to keep chemicals on the glove from running onto the skin.
- **Straight cuff**—provides extra length and a snug fit to protect from chemical runoff.
- **Slip-on or open cuff**—makes it easier to put on and take off the glove.
- **Safety cuff**—provides additional wrist protection, and improves cut and abrasion resistance.
- **Gauntlet-style cuff**—supports a looser fit, and allows greater movement of the forearm to improve comfort.
- **Knit wrist cuff**—improves the fit of the glove at the opening to prevent materials from entering the glove.

APPENDIX F-4

Foot Protection

Selection and use of foot protection must conform to standards set by OSHA (29 CFR 1910.136) and certain national consensus standards established by the American National Standards Institute (ANSI).

Compliance with National Consensus Standards
Protective footwear must comply with the following ANSI standards:

- Protective footwear purchased before July 5, 1994, must comply with the ANSI Z41.1-1967, "USA Standard for Men's Safety-Toe Footwear."
- Protective footwear purchased after July 5, 1994, must comply with ANSI Z41.1- 1991, "American National Standard for Personal Protection-Protective Footwear" or a subsequent edition.

The following two American Society of Testing Materials (ASTM) standards provide updated information on specifications for protective footwear:

- ASTM F-2412: Standard Test Methods for Foot Protection.
- ASTM F-2413: Specification for Performance Requirements for Protective Footwear.

General Requirements
The following requirements apply when using foot protection:

- Protective footwear must be worn when working in areas where there is a danger of foot injury due to falling or rolling objects, chemical hazards, objects piercing the sole, or electrical hazards.
- Protective guards, such as shoe-caps and metatarsal guards, are designed to slip over street shoes. Protective guards are not recommended if a responder will frequently encounter foot hazards on the job. They are not intended to replace steel-toe safety shoes or boots. There are no approved ANSI standards for protective guards.

Types of Protective Footwear
There are three basic types of protective footwear:

- **General protective footwear** is worn in place of regular shoes or boots.
- **Overboots** are worn over regular footwear.
- **Protective guards** are worn over regular shoes or boots.

General Protective Footwear
The five main types of general protective footwear are:

1. Safety-toe shoe or boot
Safety shoes and boots may be used in conjunction with other PPE to provide greater protection against certain hazards. These shoes are designed to protect feet from common hazards, such as falling or rolling objects, cuts, and punctures. The entire toe box and insole are reinforced with steel (or similar material) to protect the instep.

Safety shoes that insulate against temperature extremes are also available. Some are also equipped with special soles to guard against slips, chemicals, and/or electrical hazards (see below).

The shoe or boot may incorporate metatarsal protection, or a shield that protects the upper surface of the foot from impact or compression hazards. This type of footwear is generally required for work around heavy pipes, activities involving manual material carts, or similar activities where heavy loads could drop on or roll over the feet.

Safety boots offer more protection than safety shoes against chemical splash or molten material spark hazards.

Chemical-protective safety shoes and boots may be required to prevent or minimize chemical penetration when working with corrosives, caustics, cutting oils, or petroleum products. For example, when exposed to molten metals or welding sparks, lower legs and feet should be protected from heat hazards by using leather leggings or similar PPE. Safety snaps allow leggings to be removed quickly.

2. Conductive footwear
Conductive footwear protects the wearer from static electricity by equalizing the differing electrical potentials.

- Type 1 conductive footwear controls static electricity generated on the body of the worker, thereby preventing sparks which could ignite nearby flammable gases or liquids.
- Type 2 conductive footwear is designed for linemen working with high-voltage lines where the electrical potential of the person and the energized equipment must be equalized.

Note:
1. *Conductive shoes are not general-purpose shoes and must be removed upon completion of the tasks for which they are required.*
2. *Employees exposed to electrical hazards must never wear conductive shoes.*
3. *Employees must be instructed not to use foot powder or wear socks made of silk, wool, or nylon with conductive shoes.*

3. Non-conductive footwear (electrical hazard footwear)
Non-conductive footwear consists of shoes or boots designed with non-conductive materials (other than the steel toe, which is properly insulated to protect the wearer, or a toe made from another material). This type of footwear provides insulation from energized parts. It is intended for secondary protection only, for use on surfaces that are already substantially insulated.

Note:
1. *Non-conductive footwear must not be used in explosive or hazardous locations; in such locations, electrically conductive shoes are required.*
2. *Workers using electrical hazard footwear must be trained to recognize that the insulating protection of electrical hazard, safety-toe shoes may be compromised if:*
   - *The shoe is wet,*
   - *The rubber sole is worn through,*
   - *Metal particles become embedded in the sole or heel, or*
   - *Other parts of the worker's body come into contact with conductive grounded items.*

4. Sole puncture-resistant footwear
Sole puncture-resistant footwear provides protection from nails, wire, tacks, screws, large staples, or similar objects that, if stepped on, could penetrate the sole of the shoe and result in foot injury.

5. Static dissipative footwear
Static dissipative footwear insulates the wearer from electrical hazards that may exist in areas where static dissipation protection is required.

Overboots
Overboots protect a worker's boots and shoes from contact with acids, solvents, or other chemicals, or a dirty or wet working environment. Overboots do not generally offer impact or compression protection, and may need to be worn in conjunction with safety shoes to provide adequate protection against workplace hazards. If chemical protection is required, assure the overboot is compatible with, and will provide adequate protection against, the expected exposure.

Protective Guards
Protective guards consist of either shoe-caps or metatarsal guards. Protective guards can provide protection from foot injury, but should not be used to replace steel-toed safety footwear. Protective guards can be used where a worker is only occasionally (i.e., less than a few minutes per day, or hours per week) exposed to foot hazards on the job.

Other Considerations
Other types of special footwear that may be required for a worker to perform their job safely include:
- Shoes with skid resistant soles
- Waterproof footwear
- Chemical-resistant footwear
- Combinations of the above

Foundry or "gaiter" style boots, for example, feature quick-release fasteners or elasticized insets to allow quick removal of the footwear if a hazardous substance or material (such molten metal) gets into the boot itself.

Storage and Care

- Inspect safety footwear prior to each use. All footwear requires routine inspection for cuts, holes, tears, cracks, worn soles, and other damage that could compromise its protective quality.
- Defective or damaged PPE **must not be used** and removed from service.
- Follow the manufacturer's instructions for the care and maintenance of safety footwear.

Selection Chart for Foot and Leg Protection

Type of Hazard	Examples of Hazard	Recommended Protection
Impact	Heavy tools, equipment, or objects that could roll or fall onto the feet	Safety shoes or boots. Toe guards may be used over regular footwear only if infrequently exposed to this type of foot hazard.
Puncture	Work where wire, tacks, staples, metal, or nails could be stepped on	Safety shoes or boots with puncture protection.
Compression	Handling unusually heavy objects or using heavy tools or equipment could compress the top of the foot	Metatarsal footwear. Metatarsal guards may be used over regular footwear only if infrequently exposed to this type of foot hazard. Shin guards may be required for some operations where the lower leg is exposed to a rolling impact hazard.
Heat	Exposure to molten metal or other super-heated fluids	Foundry or heat resistant shoes or boots as appropriate. Leggings should be used as appropriate to protect the lower legs from molten metal or welding sparks.
Chemicals	Splash hazard or direct contact/work with chemicals (e.g., during chemical spill response)	Consult the manufacturer's literature for chemical-resistant boots appropriate for the hazard. Footwear must incorporate a safety toe if an impact hazard is also present.
Conductive	Work near or in explosive or hazardous atmospheres	Conductive footwear.
Electrical	Work with or near exposed energized electrical wiring or components	Electrical hazard safety-toe footwear.

APPENDIX F-5

Protective Clothing and Ensembles

Protective clothing and ensembles are available in a variety of materials and designs that offer protection against a range of chemicals and other hazards. This appendix provides general guidelines on the selection of protective clothing and ensembles. Guidelines for PPE Ensemble Selection provides recommendations for selecting ensembles for specific activities and tasks associated with emergency response. That resource also provides a listing of ensemble types and components to be used for protection against specific chemicals.

Classification of Protective Clothing and Ensembles
Chemical protective clothing (CPC) and protective ensembles can be classified by design, performance, and service life (see Text Box 1). All three categories must be considered when selecting appropriate protective clothing and ensembles.

Design
Categorizing protective clothing by design is mainly a means of addressing what areas of the body the clothing item is intended to protect. When selecting protective clothing, the following design features should be taken into account:

- Clothing configuration
- Components and options
- Sizes
- Ease of donning and doffing
- Clothing construction
- Accommodation of other ensemble equipment
- Comfort
- Restriction of mobility

Text Box 1
Classification of Protective Clothing and Ensembles

By Design:
Gloves
Boots
Aprons, jackets, coveralls
Full-body suits

By Performance:
Particulate protection
Liquid-splash protection
Vapor protection

By Service Life:
Single use
Limited use
Reusable

Selecting protective items on the basis of design alone does not assure adequate protection. The clothing's performance in protecting against specific chemical or physical hazards must also be taken into account.

Performance
The National Fire Protection Association (NFPA) classifies protective suits according to their performance. Each standard requires rigorous testing of the suit and its components, in terms of overall protection, chemical resistance, and physical properties.

Chemical Resistance
Protective clothing performance is evaluated based on the material's resistance to permeation, degradation, and penetration by the chemicals present in the environment. (See also Appendix F-3, Hand Protection.) However, **no material protects against all chemicals and no currently available material forms a complete barrier when in prolonged contact with any chemical.**

Permeation is the process by which a chemical dissolves in or moves through a material on a molecular basis. In most cases, there will be no visible evidence of chemicals permeating a material. Breakthrough time is the most common endpoint used to assess a material's chemical resistance. The permeation rate is a function of several factors, including chemical concentration, material thickness, humidity, temperature, and pressure. Most material testing is done with 100% chemical over an extended contact period. The time it takes the chemical to permeate the material is the breakthrough time. A material is acceptable if the breakthrough time exceeds the expected period of garment use. However, ambient conditions may speed up permeation. For example, small increases in ambient temperature can significantly reduce breakthrough time, thus reducing the material's barrier properties.

Degradation involves physical changes in a material resulting from a chemical exposure, use, or ambient conditions such as sunlight. The most common signs of degradation are discoloration, loss of physical strength, and deterioration. Penetration is the movement of chemicals through zippers, seams, or imperfections in a protective clothing material.

Mixtures of chemicals can be significantly more permeating than each chemical individually. A single highly permeating chemical can carry other substances in the mixture with it. Chemical mixtures are highly variable and their permeating properties have not been widely studied. **In the case of both mixtures and unknowns, the clothing material demonstrating the highest chemical resistance against the widest range of chemicals should be selected.**

Physical Properties
CPC materials are also evaluated based on their physical properties, including strength, resistance to physical hazards, and operation in extreme environmental conditions. Standards such as those established by the NFPA set limits on these material properties for specific applications, such as emergency response.

The NFPA standards described below define **minimum** performance requirements. Suits that are found compliant by an independent certification and testing organization may be labeled by the manufacturer as meeting the requirements of the respective NFPA standard. Manufacturers also have to supply documentation showing all test results and characteristics of their protective suits.

1. Vapor-protective suits (NFPA Standard 1991) provide "gas-tight" integrity and are intended for response situations where no chemical contact is permissible. Used in EPA Level A PPE.

2. Liquid splash-protective suits (NFPA Standard 1992) offer protection against liquid chemicals in the form of splashes, but not against continuous liquid contact or chemical vapors or gases. Used in EPA Level B PPE. ***NOTE: Using duct tape on the seams and other openings on Level B suits does NOT provide adequate protection against hazardous vapors or gases.***

3. Support function protective garments (NFPA Standard 1993) provide liquid splash protection but offer limited physical protection. Intended for use in nonemergency, nonflammable situations where the chemical hazards have been completely characterized. Support functions include proximity to chemical processes, decontamination, hazardous waste clean-up, and training.

Service Life
Categorizing protective clothing on the basis of its service life helps determine costs as well as maintenance and storage requirements. For instance, the costs and hazards associated with decontaminating reusable CPC often outweigh the costs of using single-use gear. Extensive contamination of any item, even a "reusable" one, may render it unsafe for reuse. As appropriate, emergency responders should be issued single-use CPC to avoid problems associated with decontaminating reusable items.

Types of Protective Ensembles

Table 1 below describes available protective ensembles that provide partial or full-body protection.

Table 1
Protective Ensembles for Emergency Response

Description	Type of Protection	Use Considerations
Fully-encapsulating suit— one-piece garment. Boots and gloves may be integral, attached and replaceable, or separate.	Protects against chemical splashes, dusts, gases, and vapors.	Does not allow body heat to escape. May contribute to heat stress, particularly if worn with a closed-circuit SCBA; cooling garment may be needed. Impairs worker mobility, vision, and communication.
Non-encapsulating suit— jacket, hood, pants or bib overalls, and one-piece coveralls.	Protects against splashes, dust, and other materials but not against gases and vapors. Does not protect parts of head or neck.	Do not use where gas-tight or pervasive splashing protection is required. May contribute to heat stress. Tape-seal connections between pant cuffs and boots and between gloves and sleeves.
Aprons, leggings, and sleeve protectors—fully sleeved and gloved apron or separate coverings for arms and legs. Commonly worn over non-encapsulating suit.	Provides additional splash protection of chest, forearms, and legs.	Whenever possible, use over a non-encapsulating suit to minimize potential heat stress. Useful for sampling, labeling, and analysis work. Use only when there is a low probability of total body contact with contaminants.
Firefighters' protective clothing—gloves, helmet, running or bunker coat, running or bunker pants (NFPA No. 1971, 1972, 1973), and boots (1974).	Protects against heat, hot water, and some particles. Does not protect against gases and vapors, or chemical permeation or degradation. NFPA Standard No. 1971 specifies garment consisting of outer shell, inner liner, and vapor barrier with a minimum water penetration of 25 lb/in^2 (1.8 kg/cm^2) to prevent passage of hot water.	Decontamination is difficult. Do not wear in areas where protection against gases, vapors, chemical splashes, or permeation is required.
Proximity garment (approach suit)—one- or two-piece overgarment with boot covers, gloves, and hood of aluminized nylon or cotton fabric. Normally worn over other protective clothing, firefighters' bunker gear, or flame-retardant coveralls.	Protects against splashes, dust, gases, and vapors.	Does not allow body heat to escape. May contribute to heat stress, particularly if worn with a closed-circuit SCBA; cooling garment may be needed. Impairs worker mobility, vision, and communication.
Blast and fragmentation suit— blast and fragmentation vests and clothing, bomb blankets, and bomb carriers.	Provides some protection against very small detonations. Bomb blankets and baskets can help redirect a blast.	Does not provide for hearing protection.

Description	Type of Protection	Use Considerations
Radiation-contamination protective suit—various types of protective clothing designed to prevent contamination of the body by radioactive particles.	Protects against alpha and beta particles. Does **not** protect against gamma radiation.	Designed to prevent skin contamination. If radiation is detected on site, consult a radiation expert and evacuate personnel until the radiation hazard has been evaluated.
Flame/fire retardant coveralls—normally worn as an undergarment.	Provides protection from flash fires.	Adds bulk and may exacerbate heat stress and impair mobility.

Notes:

1. *Firefighter turnout clothing, proximity gear, blast suits, and radiation suits by themselves do not provide adequate protection from hazardous chemicals.*
2. *Protective clothing should completely cover both the wearer and the wearer's breathing apparatus. In general, respiratory protective equipment is not designed to resist chemical contamination. Level A protection (vapor-protective suits) require this configuration. Level B ensembles may be configured either with the SCBA on the outside or inside. However, it is strongly recommended that the wearer's respiratory equipment be worn inside the ensemble to prevent its failure and to reduce decontamination problems. Level C ensembles use cartridge- or canister-type respirators, which are generally worn outside the clothing.*

General Guidelines for Selecting Chemical Protective Clothing and Ensembles

1. Determine type of protection required—vapor, liquid-splash, and/or particulate.

Vapor protective suits also provide liquid splash and particulate protection. Liquid splash protective garments also provide particulate protection. Splash suits must cover the entire body when combined with the respirator, gloves, and boots. Applying duct tape to a splash suit does not make it protective against vapors. Particulate protective suits may not need to cover the entire body, depending on the hazards posed by the particulate. In general, gloves, boots and some form of face protection are required. Clothing items may only be needed to cover a limited area of the body such as gloves on hands. The nature of the hazards and the expected exposure will determine if clothing should provide partial or full-body protection.

2. Conduct leak test of totally-encapsulating suits.

Many garments may be labeled as totally encapsulating but may fail to provide gas-tight integrity due to inadequate seams or closures. Gas-tight integrity can only be determined by performing a pressure or inflation test and a leak detection test of the respective protective suit. This test involves:

- Closing off suit exhalation valves
- Inflating the suit to a pre-specified pressure
- Observing whether the suit holds the above pressure for a designated period

ASTM F1052-97 Standard Test Method for Pressure Testing Vapor Protective Ensembles Suits provides a procedure for conducting this test.

3. Obtain and examine the manufacturer's technical manual.

Consult the manufacturer's manual for information on the following procedures for each item purchased:

- Donning and doffing
- Inspection, maintenance, and storage
- Decontamination
- Use

4. Evaluate the manufacturer's chemical resistance data for specific clothing.
Manufacturers of vapor-protective suits should provide permeation resistance data for their products. Information on liquid and particulate penetration resistance should be provided as appropriate for protective garments. Such data should be obtained for every primary protective material. For suits, this includes the garment, visor, gloves, boots, and seams. Buying a PVC glove for a PVC splash suit does not mean that you obtain the same level of protection. This determination must be made by comparing chemical resistance data.

Permeation data should include the following:

- Chemical name.
- Breakthrough time.
- Permeation rate.
- System sensitivity (allows comparison of test results from different laboratories).
- A citation that the data was obtained in accordance with ASTM Standard Test Method F739-85.

Manufacturers who provide only numerical or qualitative ratings must support their recommendations with complete test data.

Liquid penetration data should include a pass or fail determination for each chemical listed, and a citation that testing was conducted in accordance with ASTM Standard Test Method F903-86. Protective suits that are certified to NFPA 1991 or NFPA 1992 will meet all of the above requirements.

Particulate penetration data should show some measure of material efficiency in preventing particulate penetration in terms of particulate type or size and percentage held out. Unfortunately, no standard tests are available in this area and end-users have little basis for comparing products.

Suit materials that show no breakthrough or no penetration to a large number of chemicals are likely to have a broad range of chemical resistance. (Breakthrough times greater than one hour are usually considered to be an indication of acceptable performance.) Manufacturers should provide data on the ASTM Standard Guide F1001-99a chemicals. The chemicals listed in Table 2 below represent a cross-section of chemical classes and challenges for protective clothing materials. Manufacturers should provide test data on other chemicals as well. If there are specific chemicals within your operating area that have not been tested, ask the manufacturer for test data on these chemicals.

Table 2 Recommended Chemicals for CPC Performance Testing	
Chemical	**Class**
Acetone	Ketone
Acetonitrile	Nitrile
Ammonia	Strong base (gas)
1,3-Butadiene	Olefin (gas)
Carbon disulfide	Sulfur-containing organic
Chlorine	Inorganic gas
Dichloromethane	Chlorinated hydrocarbon
Diethylamine	Amine
Dimethyl formamide	Amide
Ethyl acetate	Ester
Ethyl oxide	Oxygen heterocyclic gas
Hexane	Aliphatic hydrocarbon
Hydrogen chloride	Acid gas
Methanol	Alcohol
Methyl chloride	Chlorinated hydrocarbon (gas)
Nitrobenzene	Nitrogen-containing organic
Sodium hydroxide	Inorganic base
Sulfuric acid	Inorganic acid
Tetrachloroethylene	Chlorinated hydrocarbon
Tetrahydrofuran	Oxygen heterocyclic
Toluene	Aromatic hydrocarbon

5. Obtain and inspect sample garment materials.
Examine the quality of clothing construction and other features that may impact its use. Representative clothing items should be obtained in advance and inspected prior to purchase. Try on representative garments prior to purchase and wear while running through exercises to simulate expected activities. Review the following selection considerations:

- Does the material have sufficient strength to withstand the physical demands of the tasks at hand?
- Will the material resist tears, punctures, cuts, and abrasions?
- Will the material withstand repeated use after contamination and decontamination?
- Is the material flexible or pliable enough to allow end-users to perform needed tasks?
- Will the material maintain its protective integrity and flexibility under hot and cold extremes?
- Is the material flame-resistant or self-extinguishing (if these hazards may be present)?
- Are garment seams in the clothing constructed so they provide the same physical integrity as the garment material?

Checklist for Selection of CPC
Choosing the most protective clothing depends on both the hazards present and the tasks to be performed. The material should resist permeation, degradation, and penetration, at the same time allowing for heat transfer (to reduce the risk of heat stress). The following checklist summarizes the factors to be considered when selecting CPC:

☐ **Durability:**
- Does the material have sufficient strength to withstand the physical stress of the task(s)?
- Will the material resist tears, punctures, and abrasions?
- Will the material withstand repeated use after decontamination? (Not applicable to single-use CPC)

☐ **Flexibility:** Will the material allow the worker to perform the task with ease (particularly in the case of gloves)?

☐ **Temperature effects:** Will the material maintain its protective integrity and flexibility under hot and cold extremes?

☐ **Ease of decontamination:**
- Are decontamination procedures available on site?
- Will the material pose any decontamination problems?
- Should disposable clothing be used?

☐ **Compatibility with other equipment:** Does the design allow for the use of other required protective equipment (e.g., suits that accommodate hard hats)?

☐ **Duration of use:**
- Can the required task be completed before contaminant breakthrough occurs?
- Can the task be completed before significant degradation of the CPC occurs?

Field selection of chemical protective clothing is a complex task that should be performed only by personnel with extensive training and experience in this area. Under all conditions, clothing should be selected by evaluating its performance characteristics against the requirements and limitations imposed by the application.

Additional Sources of Information

Many vendors supply charts which show actual test data or their own recommendations for specific chemicals. However, **end-users should approach this information with caution, since not all recommendations are supported with test data or other documentation**. Material recommendations must be based on data obtained from tests performed to standard ASTM methods. Simple ratings of "poor," "good," or "excellent" give no indication of how the material may perform against specific chemicals.

- Guidelines for the Selection of Chemical Protective Clothing, 3rd Edition. Cincinnati: American Conference of Governmental Industrial Hygienists, 1987.
- Provides a matrix of clothing material recommendations for approximately 500 chemicals based on evaluations of chemical resistance test data, vendor literature, and raw material suppliers. **Presents recommendations only by generic material class**. Numerous test results have shown that similar materials (e.g., butyl rubber) from different manufacturers may perform very differently when tested with the same chemical.

Quick Selection Guide to Chemical Protective Clothing. 5th ed. New York: John Wiley & Sons; 2007.

Pocket size guide that provides chemical resistance data and recommendations for 11 generic materials against over 400 chemicals. The guide is color-coded by material-chemical recommendation. **Presents recommendations only by generic material class**.

APPENDIX F-6

Fall Protection

Fall protection equipment must meet all applicable OSHA and ANSI requirements. OSHA covers specific fall protection requirements in various Subparts for construction and general industry. In addition, guidelines for proper installation, training, inspection, and use of fall protection must be followed.

Compliance with National Consensus Standards

Fall protection systems, equipment, and programs must comply with the following American National Standards Institute (ANSI) standards:

- ANSI A10.32-2004 – "Fall Protection Systems for Construction and Demolitions."
- ANSI Z359.1 – "Safety Requirements for Personal Fall Arrest Systems, Subsystems and Components."
- ANSI Z359.2 – "Minimum Requirements for a Comprehensive Managed Fall Protection Program."
- ANSI Z359.3 – "Safety Requirements for Positioning and Travel Restraint Systems."
- ANSI Z359.4 – "Safety Requirements for Assisted Rescue and Self-Rescue Systems, Subsystems and Components."

General Requirements

- Fall protection is required when working from unguarded surfaces above 6 feet (or 10 feet on scaffolds), or at any height when working above dangerous machinery or equipment.
- Every open-sided floor, walkway, platform, or runway 4 feet or more above adjacent floor or ground level must be guarded by a standard railing or equivalent. In addition, regardless of height, open-sided floors, walkways, platforms, or runways above or adjacent to dangerous equipment, pickling or galvanizing tanks, degreasing units, and similar hazards must be guarded with a standard railing and toeboard.
- Locking type snaphooks must be used to attach personal fall arrest equipment to the fall protection system in use.
- Effective January 1, 1998, body belts are no longer acceptable as part of an employee personal fall arrest system and full body harnesses must be used in their place.

Types of Fall Protection

Systems that provide fall protection include:

- Guardrail systems.
- Safety net systems. Safety nets are generally viewed as backup safety devices rather than primary life-saving devices.
- Personal fall protection systems. These consist of fall arrest systems, positioning systems, and travel restraint systems.

- Warning lines, designated areas, control zones. These and similar systems are permitted by OSHA in some situations and can provide protection by limiting the number of workers exposed and instituting safe work methods and procedures. These alternative systems may be more appropriate than conventional fall protection systems when performing certain activities.

Personal Fall Arrest Systems

Safety belts, harnesses, and lanyards attached to a structure or lifeline are primary life-saving devices for employees who work at high elevations. For work at low elevations, such as in confined spaces, the safety harness or belt and lanyard system can be used to retrieve an injured or incapacitated person.

Harnesses

If there is a possibility of a free-fall between 2 and 6 feet, a full-body harness must be used. A fall arrest system should be rigged so that the user cannot free-fall more than 6 feet or contact any lower level. The full-body harness allows a portion of the shock load to be transmitted to the buttocks and thighs, thereby preventing serious injury. To minimize discomfort from thigh strap pull-up in the crotch, thigh straps should be attached to the shoulders and waist on the back only.

Lanyards, Deceleration Devices, and Lifelines

A lanyard is a flexible line of rope, wire rope, or strap used to secure the body belt or body harness to a deceleration device, lifeline, or anchorage. If deceleration devices are used, they either have lanyards to attach to the belt D-ring or the manufacturer will specify the lanyard type. Lanyards and vertical lifelines to tie off one person must have a minimum breaking strength of 5,000 pounds. Nylon rope has the greatest shock absorbing characteristics. Straps (webbing) can be used where abrasion resistance is required. Other synthetic fiber ropes, such as polyester and polypropylene, are available. Select the type of material on the basis of the workplace environment. The D-rings and locking snaphooks must be capable of sustaining a minimum tensile load of 5,000 pounds. Locking snaphooks must be sized to be compatible with the member to whom they are to be connected so as to prevent unintentional disengagement.

Ropes and straps (webbing) used for lanyards, lifelines, and strength components of body belts and body harnesses must be made of synthetic fiber or wire rope. Leather body belts must not be used. A 2-inch wide by 1⁄4-inch thick steer hide strap will break at around 1,500 pounds. A 1-1⁄2-inch wide by 1⁄4-inch thick cotton webbing nylon filled strap will break at 5,000 pounds.

Several types of fall arrest and restraint devices are available to meet specific needs. Mobile and static type rope grab devices for both fiber rope and steel wire cable can move up or down the lifeline so that they can be kept adjusted at or above the shoulder to limit free-fall.

Self-retracting lifelines and lanyards can limit a freefall to less than 2 feet. These devices allow the worker to move about while working. The spring-tensioned cable retracts into the block as the worker moves toward the unit and pulls out as the worker moves away from the block. If a fall does occur, the device locks and suspends the worker until rescue is accomplished.

A vertical lifeline used to tie off one employee must have a minimum breaking strength of 5,000 pounds. The manufacturer or distributor should supply test data verifying that the design, performance, and testing requirements of the standards have been met.

Ladder Safety Devices

Ladder safety devices may be used in lieu of cage protection on tower, water tank, and chimney ladders over 20 feet in unbroken length. No landing platform is required in these cases [see 29 CFR 1910.27(d)(5)]. Ladder safety climb systems combine the safety harness or belt and lanyard with a rope or rail type grab device. Ladder safety climb devices can be used on water towers, radio and television antenna towers, and other high structures to provide the user safety as well as a system that reduces the effort required to climb very high ladders. Ladder safety devices can be used in lieu of cage protection on ladders over 20 feet in height in unbroken lengths.

Selecting a Fall Arrest System

A fall arrest system should be selected after considering such factors as the presence of sand, extreme heat or cold, solvents, acids, lubricants, and other factors that could have an adverse effect on the equipment. When conducting a hazard assessment, consideration of fall hazards before the work begins will help focus attention on fall prevention efforts. If personal fall protection systems are used, particular attention should be given to identifying attachment points and to ensuring that employees know how to properly don and inspect the equipment.

Free-fall distance should be kept to 6 feet or less. Wire rope fall arrest systems should not be used where an electrical hazard is present. If lanyards, connectors, or lifelines are subject to damage by work operations such as welding or sandblasting, exposed fall arrest system components must be protected. Design, system performance criteria, care and use, and inspection requirements for fall arrest systems for powered platforms are contained in 29 CFR 1910.66, Appendix C. These same considerations should be observed for fall arrest systems for any operation.

Storage and Care of Fall Protection

Before a fall arrest system is used and after any fall arrest component or system is changed, employees must be trained to use and maintain the system safely. Fall arrest systems must be inspected prior to each use for mildew, wear, damage, and other deterioration. Defective components must be removed from service. Any fall arrest systems or components subjected to impact loading (such as an accidental fall) must be immediately removed from service. It must not be used again for employee protection unless a competent person inspects the system or component, determines it to be undamaged, and authorizes its reuse.

APPENDIX G

National Fire Protection Association (NFPA) Protective Clothing and Equipment Performance Standards and Ensembles

Standard: NFPA 1991 Standard on Vapor-Protective Ensembles for Hazardous Materials Emergencies, 2005 Edition		
Ensemble: NFPA 1991 vapor-protective ensemble, including totally encapsulating suit with attached or separate gloves and footwear or booties with outer boots. Important Features: The primary purpose of NFPA 1991 is to define requirements that isolate the wearer from a surrounding hazardous chemical environment. NFPA 1991 defines an ensemble consisting of a suit with attached gloves that totally encapsulates the wearer and his or her breathing apparatus. Ensembles are frequently configured with an overcover, outer gloves, and outer boots in order to meet the requirements of the standard; however, some products can meet the requirements without these extra layers. Suit materials, including visors and seams, are evaluated for permeation resistance against 21 different industrial chemicals and 5 chemical warfare agents. NFPA 1991 also includes optional criteria for liquefied gas protection and flash fire escape protection. Additional criteria are provided for each of the certification options. Product labels must clearly indicate which options apply to the specific ensemble.		
Description and Features of Ensemble Components		
Vapor-Protective Garment	**Footwear**	**Gloves**
Vapor-protective garment (certified as compliant with NFPA 1991).	Vapor-protective footwear (certified as compliant with NFPA 1991). Footwear may be attached to suits as part of an overall ensemble. Alternatively, the footwear system may consist of a bootie (sock-like extension of the suit) combined with an outer boot. The footwear system must provide a gas-tight interface with the suit. Footwear is evaluated as part of the ensemble for gas-tight integrity. Materials are evaluated for permeation resistance against 21 different industrial chemicals and 5 chemical warfare agents. Footwear is further evaluated for physical properties (impact, abrasion, cut, puncture, cold temperature performance) and function (traction).	Vapor-protective gloves (certified as compliant with NFPA 1991). Gloves are attached to suits as part of an overall ensemble. The gloves may be one or more layers (multiple gloves) with a gas-tight interface with the suit sleeve. Gloves are evaluated as part of the ensemble for gas-tight integrity. Materials are evaluated for permeation resistance against 21 different industrial chemicals and 5 chemical warfare agents. Gloves are further evaluated for physical properties (cut, puncture, cold temperature performance) and function (dexterity).
NFPA 1991 certified ensemble (an example)		**Operating considerations**
Tychem® Responder NFPA 1991-2005 Fully Encapsulated Level A Ensemble- Rear Entry (RS601T)[a] Manufacturer: DuPont Personal Protection Model Number: RS601T Part/Stock Number: RS601T Description:		NFPA 1991 ensembles are intended for severe chemical exposure skin hazards. The suits are designed to provide protection from gases, vapors, liquids, and particulates. *The flash fire option on certified NFPA 1991 ensembles is for escape only*. Users should not knowingly enter a flammable or explosive atmosphere. Level A ensembles should not be used without extensive training. Use considerations are provided in OSHA Title 29 CFR

• Total Encapsulating NFPA 1991-2005 (Vapor Protective) ensemble. Responder® suit with aluminized Fiberglass overcover • Expanded back, rear entry • Covered exhaust valves, gloves and sock boots • 41561 Responder® / 65161 Fiberglass Overcover[b] Fabric Description: Responder® - A patented, fabric consisting of multiple barrier films laminated to both sides of a tough substrate material. Responder® is economical, lightweight, and offers a broad range of chemical resistance with more than 235 chemicals and gases. Color: Dark Blue Physical design features: • Size-specific • Rear entry Required elements for the ensemble: • Footwear • Gloves • Respiratory equipment Hand protection for the ensemble: Attached gloves, replaceable Footwear for the ensemble: Attached bootie worn with outer boot Respirator certified for use with this ensemble: Works in conjunction with most positive pressure systems For more information: http://personalprotection.dupont.com	Sections 1910.120 and 1910.132, and NFPA 1500, Standard on Fire Department Occupational Safety and Health Program.

Standard: NFPA 1992 Standard on Liquid Splash-Protective Clothing for Hazardous Materials Emergencies, 2005 Edition		
Ensemble: NFPA 1992 Encapsulating or Non-encapsulating liquid splash-protective ensemble Important Features: NFPA 1992 liquid splash ensembles consist of a full body garment, gloves, and footwear. The liquid splash-protective ensemble is either an encapsulating or non-encapsulating ensemble. Encapsulating ensembles enclose the wearer and his or her breathing apparatus; for non-encapsulating ensembles, the face area of the garment is open but the breathing apparatus covers the wearer's face. Both types of ensembles are evaluated with all components in place (garments, gloves, and footwear) for functionality and liquid-tight integrity. Different design features include the types of interfaces between gloves and footwear, and the type of closure. Liquid splash ensembles incorporate different materials for garments, gloves, and footwear. Some garment materials may be breathable, but still resist penetration by liquids.		
Description and Features of Ensemble Components		
Liquid Splash-Protective Garment	**Footwear**	**Gloves**
Liquid splash-protective garment (certified as compliant to NFPA 1992). The garment is an element of the liquid splash-protective ensemble or an item of protective clothing designed to provide protection to the upper and lower torso, arms and legs (excluding the head, hands, and feet when garment hoods, gloves, and footwear are not provided). Garments include one or multi-piece splash suits, coveralls, and encapsulating suits. NFPA 1992 further permits both full body and partial body garments. Different design features include the types of interfaces between gloves and footwear, and the type of closure. Liquid splash ensembles incorporate different materials which may be coated or special laminates. Some garment materials may be breathable, but still resist penetration by liquids.	Liquid splash-protective footwear (certified as compliant to NFPA 1992). Footwear is an item of clothing or an element of the protective ensemble designed to provide required protection to the foot, ankle, and lower leg. Footwear includes boots or outer boots in conjunction with booties. Boots may use different rubber materials and may or may not include a liner. Footwear must be liquid-tight and provide physical hazard resistance against toe impact, cut, puncture, and abrasion. Soles must provide adequate traction.	Liquid splash-protective gloves (certified as compliant to NFPA 1992). Gloves are an element of the liquid splash-protective ensemble or an item of protective clothing designed to provide protection to the hands and wrists. Gloves are generally either supported or unsupported styles with different cuff design and grip finishes. Glove materials must demonstrate resistance to liquid chemical penetration, physical hazard resistance, and adequate hand function (dexterity).
NFPA 1992 certified ensemble (an example)		**Operating Considerations**
Non-encapsulating Lion Tactix® ICG Manufacturer: Lion Apparel Model Number: CMTM90 Part/Stock Number: not provided		*NFPA 1992 does not address liquid splash protection against chemical warfare agents (CWA); it only addresses industrial chemicals*. If CWA liquid splash protection is required, an NFPA 1994 Class 3 ensemble should be selected. An NFPA 1992 ensemble is appropriate for protecting decontamination personnel at an incident involving

Description: Lion Apparel's Lion Tactix® ICG is a protective ensemble for chemical/biological terrorism incidents and liquid splash-protective clothing for hazardous materials emergencies certified to NFPA 1994 - 2007, Class 2 and NFPA 1992 - 2005.[c] This ensemble is designed to provide LIMITED protection to the torso, legs, feet, arms, hands, and head against hazards to emergency responders involved in hazardous materials emergencies and chemical/biological terrorism incidents, including: • Limited chemical splash protection • Limited protection against particulate environments • Limited protection against vaporous and liquid chemical/biological terrorism agents (dual use industrial chemicals, chemical terrorism agents or biological terrorism agents) • Limited protection against bloodborne pathogens from contact with bodily fluids • Limited flame resistance • Limited protection against physical puncture and abrasion • Limited protection against exposure to adverse weather Required elements for the ensemble: • Footwear • Gloves • Respiratory equipment Hand protection for the ensemble: Multi-layer glove requirements Footwear for the ensemble: Attached bootie worn with outer boot Respirator and other pass-throughs certified for use with this ensemble: Draeger Panorama Nova CBRN Face Piece or Draeger Airboss PSS 100 Plus SCBA. NIOSH # 13F-515CBRN, 13F-514CBRN, 13F-513CBRN, 13F512CBRN, 13F-380CBRN, 13F379CBRN, 13F-378CBRN, 13F-377CBRN For more information: www.lionapparel.com	biological or radiological particulates as defined in the SEL Hazard-Role Matrix. NFPA 1992 addresses the second tier of hazardous materials response protection. This standard establishes the requirements for chemical liquid splash protection where the chemical vapors that exist during a hazardous material response are no longer a hazard. The liquid splash-protective ensembles are intended for situations where the primary form of chemical exposure is short-term intermittent contact with liquid chemicals that do not produce skin-toxic or carcinogenic vapors. NFPA 1992 further permits the individual certification of garments, gloves, and footwear, which may not be part of an overall ensemble. The primary purpose of NFPA 1992 is to establish requirements for clothing that keeps liquids from contacting the wearer's skin. Use considerations are provided in OSHA Title 29 CFR Sections 1910.120 and 1910.132, and NFPA 1500, Standard on Fire Department Occupational Safety and Health Program.

Standard: NFPA 1994 Standard on Protective Ensembles for First Responders to CBRN Terrorism Incidents, 2007 Edition[d, e]		
Ensemble: NFPA 1994 Class 2 Ensemble, Terrorism Incident Protective. (All NFPA 1994 ensembles are intended to be disposable after a single exposure.) Important Features: Ensembles certified as compliant with NFPA 1994 Class 2 requirements consist of a full body one- or multi-piece garment, gloves, footwear, and CBRN Self-Contained Breathing Apparatus (SCBA)[f]. Note that the certification applies to a specific set of elements identified by make/model (garment, gloves, boots, SCBA) and the ensemble certification is void unless the specified elements are used (e.g., it is not permissible to substitute boots or a respirator that have not been certified as part of the ensemble). The ensemble may be designed with the SCBA worn inside or outside the ensemble. The ensemble is designed to minimize the inward leakage of gases or vapors as demonstrated by a man-in-simulant test where performance levels have been set at levels commensurate with protection in an Immediately Dangerous to Life and Health (IDLH) environment. Ensembles are further evaluated for integrity with respect to liquid penetration. Materials are tested for permeation resistance to selected chemical agents and toxic industrial chemicals at concentrations consistent with the same levels used for evaluating CBRN SCBA; materials are also tested for viral penetration resistance, and various physical properties to demonstrate adequate physical hazard resistance and durability for a single use. Ensembles are also tested for functionality.		
Ensemble Components	**NFPA 1994 Class 2 certified ensemble (an example)**	**Operating Considerations**
NFPA 1994 Class 2 CBRN Terrorism Incident Protective Ensemble includes garment, gloves, footwear, and CBRN SCBA[f] (certified as compliant with NFPA 1994). NFPA 1994 Class 2 certifications specify these elements by make/model. All components of this ensemble should be purchased and used as a complete ensemble.	1. Tychem® TK Fully Encapsulated Level A suit (TK612T)[a] Tychem® TK suit must be worn with a separate over-cover for abrasion, tear, cut, flame & puncture resistance. Manufacturer: DuPont Personal Protection Model Number: TK612T Part/Stock Number: TK612T Description: • Fully encapsulated Level A NFPA 1994-2007, Class 2 garment • Extra wide three-layer faceshield (PVC 40 mil / Teflon® 5 mil / PVC 20 mil) • Three-layer glove system (Neoprene / EVOH film / Kevlar® knit) • Expanded back (accommodates SCBA) • Front entry, gas-tight zipper closure, double storm flap over zipper • Attached boots • Outer boot flaps • Knee wear pads • Four exhaust valves • Internal adjustment belt	Class 2 ensembles are designed to protect emergency responder personnel at terrorism incidents involving vapor or liquid chemical hazards where the concentrations are at or above IDLH levels, requiring the use of SCBA. Conditions of exposure include possible contact with vapors, gases, liquids, aerosols, particulates and highly contaminated surfaces at the emergency scene. For Class 2 ensembles, breathing air from the SCBA may limit wearing time. Use considerations are provided in OSHA Title 29 CFR Sections 1910.120 and 1910.132, and NFPA 1500, Standard on Fire Department Occupational Safety and Health Program.

	Fabric Description: Tychem® TK - a patented limited-use fabric consisting of multiple barrier films laminated to both sides of a tough substrate material. Tychem® TK provides one of the broadest ranges of chemical protection available, successfully tested against more than 260 chemicals. Physical design features: • Size-specific • Front entry Required elements for the ensemble: Footwear Gloves Respiratory equipment Hand protection for the ensemble: Attached gloves, replaceable Footwear for the ensemble: Attached bootie worn with outer boot Respirator and other pass-throughs certified for use with this ensemble: not provided For more information: http://personalprotection.dupont.com 2. Tychem® TK Fully Encapsulated Level A suit (TK613T) [a] Tychem® TK suit must be worn with a separate over-cover for abrasion, tear, cut, flame & puncture resistance. Manufacturer: DuPont Personal Protection Model Number: TK613T Part/Stock Number: TK613T Description: • Fully encapsulated Level A NFPA 1994-2007, Class 2 garment	

	• Expanded back (accommodates SCBA) • Rear entry, gas tight zipper with double storm flaps suit with double taped seams • Extra-wide three layer extra wide faceshield (40 mil PVC, 5 mil Teflon overlay, 20 mil PVC) • Four exhaust valves • Attached 3 layer glove system (Neoprene, EVOH, Kevlar® knit • Attached sock boots with boot flaps • Knee wear pads • Internal adjustment belt Fabric Description: Tychem® TK - a patented limited-use fabric consisting of multiple barrier films laminated to both sides of a tough substrate material. Tychem® TK provides one of the broadest ranges of chemical protection available, successfully tested against more than 260 chemicals. Physical design features: • Size-specific • Rear entry Required elements for the ensemble: • Footwear • Gloves • Respiratory equipment Hand protection for the ensemble: Multi-layer glove requirements Footwear for the ensemble: Attached bootie worn with outer boot List respirator and other pass-throughs certified for use with this ensemble: not provided For more information: http://personalprotection.dupont.com	

Standard: NFPA 1994 Standard on Protective Ensembles for First Responders to CBRN Terrorism Incidents, 2007 Edition [d, e]	
Ensemble: NFPA 1994 Class 3 Ensemble, Terrorism Incident Protective.[g] (All NFPA 1994 ensembles are intended to be disposable after a single exposure.) Important Features of Ensemble: Ensembles certified as compliant with NFPA 1994 Class 3 requirements consist of full body one- or multi-piece suit, gloves, and CBRN APR [f] or CBRN PAPR [f]. Note that the certification applies to a specific set of elements identified by make/model (garment, gloves, boots, respirator) and the ensemble certification is void unless the specified elements are used (e.g., it is not permissible to substitute boots or a respirator that have not been certified as part of the ensemble). The ensemble is designed for protection against lower exposure levels of gases, vapors, liquids, and particulates (as compared to 1994 Class 2 ensembles). The same man-in-simulant test described for Class 2 ensembles is used to measure the inward leakage of gases or vapors, but lower criteria are set for consistency with exposure levels below IDLH (Immediately Dangerous to Life and Health) levels. Ensembles are evaluated for liquid integrity, but at shorter times compared to Class 2 ensembles. Materials are tested for permeation resistance to selected chemical agents and toxic industrial chemicals at concentrations consistent with the same levels used for evaluating CBRN APR; materials are also tested for viral penetration resistance, and various physical properties to demonstrate adequate physical hazard resistance and durability for a single use. Ensembles are also tested for functionality.	
Ensemble Components	**Operating Considerations**
NFPA 1994 Class 3 CBRN Terrorism Incident Protective Ensemble includes garment, gloves, footwear, and CBRN APR or PAPR (certified as compliant with NFPA 1994) [f.] NFPA 1994 Class 3 certifications specify these elements by make/model. All components of this ensemble should be purchased and used as a complete ensemble.	Class 3 ensembles are designed to protect emergency responder personnel at terrorism incidents involving low levels of vapor or liquid chemical hazards where the concentrations are below IDLH levels, permitting the use of air-purifying respirators (APR) or powered air-purifying respirators (PAPR). Class 3 ensembles are intended for situations where the hazards have been characterized. These may include incidents long after the release has occurred, at relatively large distances from the point of release, or in the peripheral zone of the release scene for such functions as decontamination, patient care, crowd control, perimeter control, traffic control, and clean-up. Class 3 ensembles should only be used when there is very little potential for vapor or gas exposure, when exposure to liquids is expected to be incidental through contact with contaminated surfaces, and when dealing with patients or self-evacuating victims. Class 3 ensembles must cover the individual, and it is preferred that this clothing also cover the wearer's respirator to limit its potential for contamination. Use considerations are provided in OSHA Title 29 CFR Sections 1910.120 and 1910.132, and NFPA 1500, Standard on Fire Department Occupational Safety and Health Program.

Standard: NFPA 1994 Standard on Protective Ensembles for First Responders to CBRN Terrorism Incidents, 2007 Edition[d, e]	
Ensemble: NFPA 1994 Class 4 Ensemble, Terrorism Incident Protective.[g] (All NFPA 1994 ensembles are intended to be disposable after a single exposure.) Important Features of Ensemble: Ensembles certified as compliant with NFPA 1994 Class 4 requirements consist of full body one- or multi-piece garment, gloves, and CBRN APR[f] or CBRN PAPR[f]. Note that the certification applies to a specific set of elements identified by make/model (garment, gloves, boots, respirator) and the ensemble certification is void unless the specified elements are used (e.g., it is not permissible to substitute boots or a respirator that have not been certified as part of the ensemble). The ensemble is designed to minimize the inward leakage of biological or radiological particulates only, verified by a particle-tight integrity test. The suit and component parts do not offer protection from gases, vapors, or aerosols. Limited liquid protection is offered, primarily to enable wet decontamination. Materials are tested for viral penetration resistance and various physical properties to ensure adequate single use durability and resistance to physical hazards. Ensembles are tested for functionality.	
Ensemble Components	**Operating Considerations**
NFPA 1994 Class 4 CBRN Terrorism Incident Protective Ensemble, including garment, gloves, footwear, and CBRN APR or PAPR (certified as compliant with NFPA 1994). NFPA 1994 Class 4 certifications specify these elements by make/model. All components of this ensemble should be purchased and used as a complete ensemble.	Class 4 ensembles are designed to protect emergency first responder personnel at terrorism incidents involving biological hazards or radiological particulate hazards where the concentrations are below Immediately Dangerous to Life and Health (IDLH) levels, permitting the use of air-purifying respirators (APR), or powered-air purifying respirators (PAPR). Class 4 protective ensembles are intended for use in situations involving only biological or radiological particulates, where there is no threat for exposure to chemical warfare agents or toxic industrial chemicals. While Class 4 ensemble materials are evaluated for viral penetration resistance for protection against bloodborne pathogens (OSHA Title 29 CFR 1910.1030), they should only be used when there is very little potential for liquid exposure. Class 4 ensembles must cover the individual; however, the respirator certified with the ensemble may cover the face of the wearer. Because these ensembles are intended for longer wearing periods, the use of air-purifying respirators or powered air-purifying respirators with these suits is likely. Use considerations are provided in OSHA Title 29 CFR Sections 1910.120 and 1910.132, and NFPA 1500, Standard on Fire Department Occupational Safety and Health Program.

[a] DuPont is recommending that all Tychem® Level A suits purchased from May 2002 through June 2007 be inspected to determine if diaphragms are two years of age or older. If the diaphragm is two years of age or older, it should be replaced. While valve diaphragm replacement is not a requirement, DuPont supports the recommendation of the valve manufacturers, Auer and Pirelli, who suggest replacement of the valve diaphragm every two years as part of routine maintenance, regardless of the brand of Level A suit.

[b] *Over Cover Warning:* This product must be worn with its over cover and all specified components designated by the manufacturer in order to be compliant with NFPA 1991, Standard on Vapor Protective Ensembles for Hazardous Materials Operations. The use of the over cover is not optional and is necessary to meet the requirements of NFPA 1991.

[c] *Warning*: Controlled lab tests in the NFPA 1992-2005 and NFPA 1994-2007 standards "cannot be deemed as establishing performance levels for all situations to which hazardous materials operations or chemical/biological terrorism incidents personnel can be exposed." You should use extreme caution in any hazardous materials situation to avoid the risk of injury. See NFPA 1994-2007 and NFPA 1992-2005, Para. 1-2.2.

Protective properties in a new NFPA 1992-2005 or NFPA 1994-2007, Class 2 compliant garment will diminish as the product is worn and ages. To reduce the risk of injuries, you MUST follow the manufacturer's recommendations for inspection and retirement of your ensemble to ensure that the ensemble is not used past its useful life.

[d] The 2007 edition of NFPA 1994 transfers the requirements of the former the Class 1 ensemble to NFPA 1991: Standard on Vapor-Protective Ensembles for Hazardous Materials Emergencies, where the highest level of vapor protection is covered.

[e] The 2007 edition of NFPA 1994 became effective on 17 August 2006. Ensembles certified to the 2001 edition may not comply with the 2007 edition. Ensembles certified to the 2001 edition of NFPA 1994 will no longer be available for purchase after 28 February 2007.

[f] All respirators for NFPA 1994 levels of protection must be certified by NIOSH as CBRN-compliant.

[g] The 2007 Edition of NFPA 1994 introduced substantial changes, including elimination of Class 1, new requirements for Classes 2 and 3, and addition of Class 4. *Currently, several products have been recertified as compliant with the new Class 2 requirements. However, only one ensemble has been certified as compliant with the new Class 3 requirements (this certification is currently on hold pending further testing by NIOSH), and none with Class 4.*

APPENDIX H

Selection of Personal Protective Equipment for Response to Chemical, Biological, Radiological, and Nuclear Agents

PPE for Response to
Chemical, Biological, Radiological, or Nuclear (CBRN) Agents

All PPE selected for response to chemical, biological, radiological, or nuclear (CBRN) hazards must meet the requirements of OSHA's Hazardous Waste Operations and Emergency Response (HAZWOPER) standard, 29 CFR 1910.120, and 29 CFR Subpart I. The National Institute for Occupational Safety and Health (NIOSH) has approved respirators specifically for CBRN exposures.

As in any emergency response, the first step in selecting PPE for protection against CBRN agents is to conduct a site hazard assessment. Emergency responders must use extreme caution when responding to CBRN agents:

- Many of the agents are highly toxic by both inhalation and skin absorption.
- Typical indicators of exposure, such as odor, smoke, or fume, may not be present.
- Detection of some CBRN agents is difficult.

The OSHA zone designations in Figure 1 (Red, Yellow, and Green) and the corresponding PPE recommendations in Table 1 provide guidance on protecting emergency responders during CBRN incidents. This guidance should be supplemented with information on the specific hazardous agents identified during the hazard assessment.

Figure 1. CBRN Hazard Zones

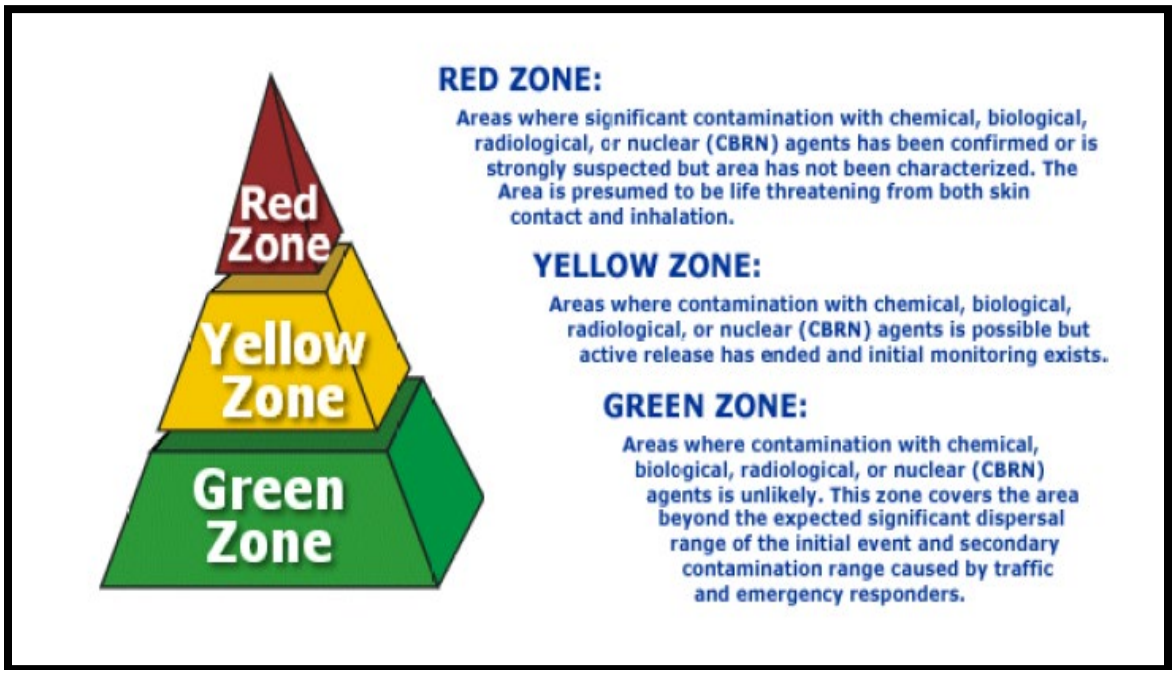

Table 1
Recommended PPE and Prudent Work Practices
for Emergency Response to CBRN Agents

OSHA Zone (Fig. 1)	Recommended PPE	Prudent Work Practices
Red	Level A protection must be worn when the release is still active, or when the release has stopped but there is no information about the release duration or airborne concentration of the CBRN agent(s). For initial response to suspected CBRN agents, use a **NIOSH CBRN-certified positive-pressure self-contained breathing apparatus (SCBA) with a fully encapsulating protective suit** (meeting appropriate NFPA 1991/1994 requirements) until monitoring results allow for selection of less protective ensembles.	• Minimize exposure time by performing only those activities essential to lifesaving or initial monitoring. • Avoid any unnecessary contact with surfaces or potentially contaminated material. • Use natural ventilation flows to reduce exposure (e.g., stay upwind of release). • Obtain exit evaluation for signs and symptoms of exposure.
Yellow	Refer to the CBRN hazard-specific guidance as follows: • Nerve agents(see Guidelines for PPE Ensemble Selection) • Blister agents (see Guidelines for PPE Ensemble Selection) • Biological agents (see text below) • Radiological dispersal devices (see text below)	Follow same practices as described for the Red Zone.
Green	No specific PPE is recommended, however, a minimal or transient CBRN level may exist in the aftermath of a release.	• Inform people of the location of hazard zones. • Stress general hygiene practices. • Provide information regarding signs and symptoms of exposure. • Provide a means for reporting suspected exposures. • Provide information on voluntary use of PPE.

Selection of PPE for Response to Incidents Involving the Release of Biological Agents

The following recommendations are based on the Centers for Disease Control and Prevention (CDC) document, *Interim Recommendations for the Selection and Use of Protective Clothing and Respirators Against Biological Agents*.

PPE	Conditions
Pressure-demand SCBA with Level A protective suit.	• Event is uncontrolled. • The type(s) of airborne agent(s) is unknown. • The dissemination method is unknown. • Dissemination via an aerosol-generating device is still occurring. • Dissemination via an aerosol-generating device has stopped, but there is no information on the duration of dissemination or the exposure concentration.
Pressure-demand SCBA with Level B protective suit.	• The suspected biological aerosol is no longer being generated. • Other conditions may present a splash hazard.
Full-facepiece respirator with P100 filter or PAPR with HEPA filters. Disposable hooded coveralls, gloves, and foot coverings.	• An aerosol-generating device was not used to create high airborne concentration. • Dissemination was by a letter, package, or other material that can be bagged, contained, etc.
Other Workers: PPE recommendations for workers other than emergency responders must be developed in the HASP for the specific scenario. PPE will vary by job type (cleanup, decontamination, medical, etc.), type of exposure (airborne or surface/liquid/soil hazard), and additional site hazards (chemical, physical, etc.).	

Selection of PPE for Response to Incidents Involving a Radiological Dispersal Device

A radiological dispersal device (RDD), or "dirty bomb," is a conventional explosive device that contains radioactive material. When detonated, the device disperses the radioactive material over a wide area. In the most likely scenario, low-level radioactive powder or pellets would be used, and the contamination would be dispersed over a few city blocks. The actual radiation hazard depends on the source. It is unlikely that enough radiation would be present to cause severe illness in the exposed population.

PPE to prevent skin contamination of particulates is very effective against particulate-borne radiation hazards (i.e., alpha and beta particles). Typical firefighter turn-out gear, including an SCBA, is generally adequate for this purpose. **The use of turn-out gear or any disposable protective clothing suitable for particulate exposure should be followed by appropriate decontamination of personnel and equipment.**

Inhalation of radioactive particulates can be prevented by use of an appropriate particulate respirator. Respiratory protection specifically approved by NIOSH for CBRN exposures is desirable. However, where specific CBRN-approved respirators are not available, the Onsite Safety Officer may allow alternative NIOSH-approved respirators, such as SCBAs, or full-face powered or non-powered air-purifying respirators with P-100 or HEPA filters, as appropriate. It should be noted that these recommendations for respiratory protection are intended ONLY for protection against inhalation of radioactive particulates. Additional protection may be necessary for other contaminants, such as chemical or biological agents. Refer to the manual's Radiation Safety Program chapter.

Note: Emergency responders to an explosion or the resulting fires will generally not know they are being exposed to radiation unless they use a radiation detecting device. There is no practical PPE to protect first responders against externally penetrating gamma radiation. Monitoring devices are the only means to ensure that responders do not enter an area where gamma radiation is excessive.

References

- 29 CFR 1910.1096, Ionizing Radiation. OSHA Standard.
- Manual of Protective Action Guides and Protective Actions for Nuclear Incidents. Environmental Protection Agency (EPA), Office of Radiation Programs, (1992, May), 16 MB PDF, 274 pages.
- Radiological Emergency Response Health and Safety Manual. U.S. Department of Energy (DOE) Report DOE/NV/11718-440, (2001, May), 1 MB PDF, 103 pages.

APPENDIX I

Calculating Allowable Exposures for Unusual Work Schedules

A normal work shift is generally considered to be a work period of no more than 8 consecutive hours during the day, 5 days a week, with at least an 8-hour rest. Any shift that incorporates more continuous hours, requires more consecutive days of work, or requires work during the evening should be considered extended or unusual.

Emergency responders must often work for time periods outside the conventional 8-hour work day. In particular, extended shifts may be required during emergency response to incidents involving chemical, biological, radiological or nuclear (CBRN) agents, which occur without warning and may require continuous monitoring. In such circumstances, using standard occupational exposure limits (OELs) such as permissible exposure limits (PELs) or threshold limit values (TLVs) to determine allowable exposures and work durations, or to select appropriate PPE, may not adequately protect emergency responders from hazardous exposures.

By definition, an employee's exposure to a chemical may not exceed the OSHA PEL in any 8-hour work shift of a 40-hour work week. TLVs, published by the American Conference of Governmental Industrial Hygienists (ACGIH), also are typically based on an exposure duration of 8 hours per shift and 40 hours per week. Determining safe exposure levels for emergency responders working outside this time frame is not simply a matter of extrapolating from the PELs or TLVs. This appendix provides guidance on calculating acceptable exposure levels for unusual shifts, based on the PEL or TLV. A competent industrial hygiene professional should be consulted to perform these calculations.

Brief and Scala Model

A simple and conservative method, known as the Brief and Scala model, is widely used for calculating the OEL for any given combination of hours. (The ACGIH endorses this method.) This model reduces the given PEL or TLV proportionately for both increased exposure time and reduced recovery (i.e., non-exposure) time, and is generally applicable to work shifts longer than 8 hours per day or 40 hours per week. The model should not be used to justify very high exposure levels where the exposure periods are brief. For instance, working for one hour at a level eight times the PEL, with zero exposure for the remainder of the shift, could result in severe overexposure, and is not an acceptable application of the model.

The Brief and Scala model uses a reduction factor (RF) to convert an 8-hour OEL to an exposure value that is suitable for an unusual exposure duration. The daily reduction factor (DRF) is calculated as follows:

Daily Reduction Factor (DRF) = [8/h x (24-h/16)]
where h = number of actual hours worked per day

Adjusted Exposure Limit = 8-hour OEL* x Daily Reduction Factor (DRF)
*such as a PEL or TLV

Using this model, the DRF for a 10-hour work shift would be 0.7. For a 12-hour work shift, the reduction factor would be 0.5. A chemical with a PEL or TLV of 50 ppm would be reduced to 35 ppm for a 10-hour work shift and 25 ppm for a 12-hour shift.

The Brief and Scala model can be used to calculate an adjusted exposure limit where emergency responders may work for an extended work week, based on a weekly reduction factor (WRF), as follows:

Weekly Reduction Factor (WRF) = [40/h x (168-h)/128]
where h = number of hours worked per day

Adjusted Exposure Limit = 8-hour OEL x Weekly Reduction Factor (WRF)

The most protective approach is to calculate the adjusted exposure limits using both the daily and weekly reduction factors. The more restrictive value of the two should be adopted.

Reference

Paustenbach, D.J. "Occupational Exposure Limits, Pharmacokinetics, and Unusual Work Schedules." In Patty's Industrial Hygiene and Toxicology, 3rd Ed., Vol. 3A, The Work Environment, Chap. 7, pp. 222-348, R.L. Harris, L.J. Cralley, and L.V. Cralley, Editors, John Wiley & Sons, New York (1994).

APPENDIX J

Sample Decontamination and Doffing Procedures for Typical Levels A, B, and C

Doffing Disposable PPE
Figures 1 through 5 are taken from the Occupational Safety and Health Guidance Manual for Hazardous Waste Site Activities, a joint publication of NIOSH, OSHA, USCG, and EPA:

- Figure 1: Maximum Decontamination Layout, Level A Protection
- Figure 2: Maximum Decontamination Layout, Level B Protection
- Figure 3: Maximum Decontamination Layout, Level C Protection
- Figure 4: Minimum Decontamination Layout, Levels A and B Protection
- Figure 5: Minimum Decontamination Layout, Level C Protection

These figures depict the procedures for doffing PPE and the recommended order for stationing decontamination line assistants. Since contamination hazards during an emergency response vary greatly, the methods of decontamination should be adjusted by omitting, adding, or changing the stations identified in Figures 1 through 5. Once established, the order and method of decontamination should be monitored for its effectiveness.

Doffing and Decontaminating Reusable PPE
When reusable PPE is worn, it must either be decontaminated on site or carefully packed and transported for later decontamination. Full decontamination of reusable suits is usually accomplished in two steps. The first step is performed in the contamination reduction zone, using a cleaning solution that has previously been determined acceptable based on limited background knowledge of the site's suspected chemical or biological hazards (see Figures 1 through 5). After cleaning, the protective clothing is turned inside out, if possible, and sealed in plastic bags for return shipment.

Depending on the types and concentrations of contaminants present, waste decontamination solutions may need to be treated as a hazardous waste and disposed of accordingly.

Low-Level Contamination
Site work may be conducted in Level D PPE in many cases but that does not mean that the threat of contamination is eliminated. Decontamination of personnel at sites with low levels of contamination or personnel who do not participate in exclusion zone activities should not be overlooked. At Level D activity sites, decontamination should be provided for the following:

- Washing boots or removing and disposing of boot covers (booties).
- Removal and disposal of disposable coveralls.
- Removal and disposal of outer and inner gloves.
- Washing hands, arms and face prior to leaving the site, or taking any breaks for eating or, smoking.

Figure 1. Maximum Decontamination Layout, Level A Protection

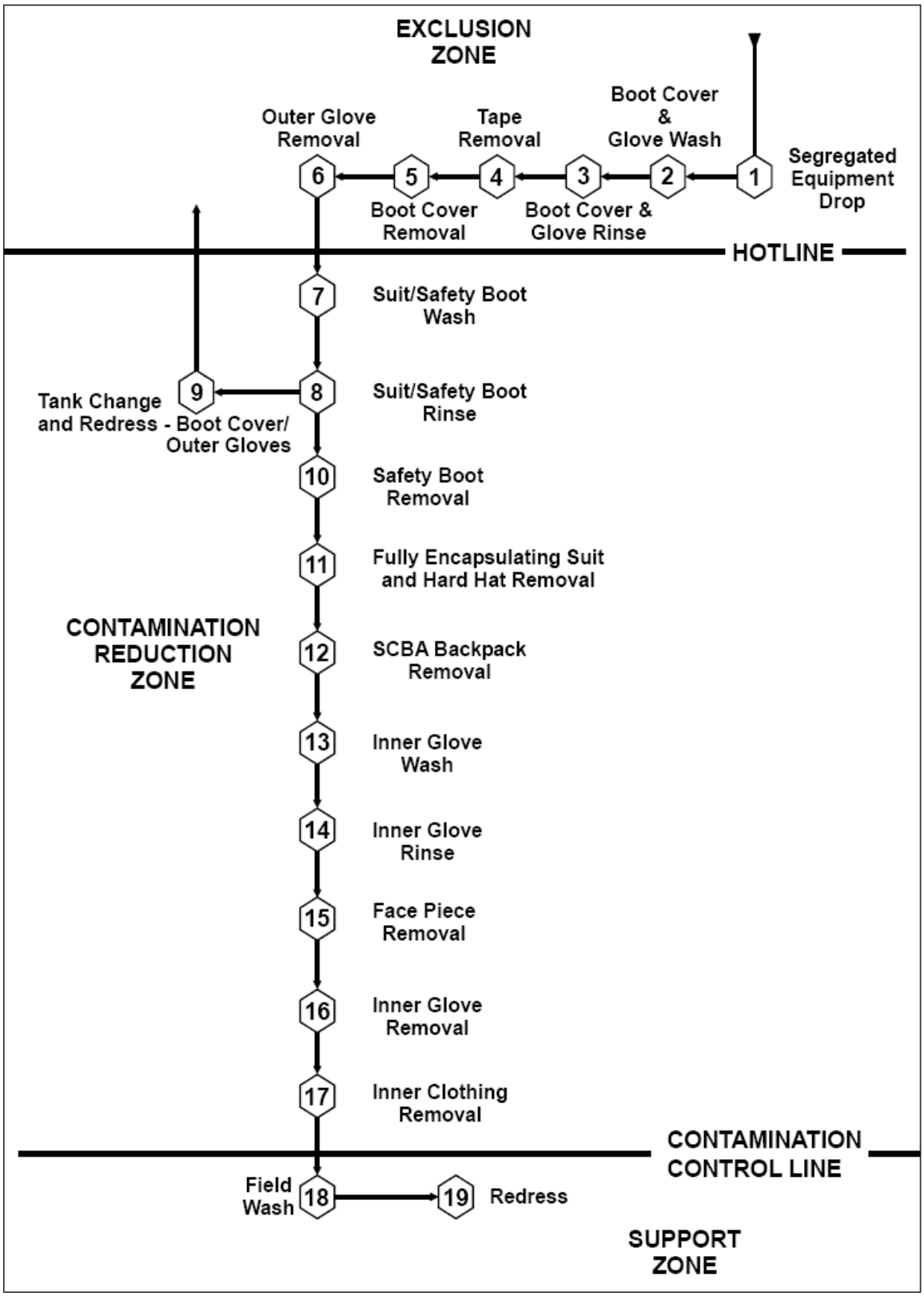

Figure 2. Maximum Decontamination Layout, Level B Protection

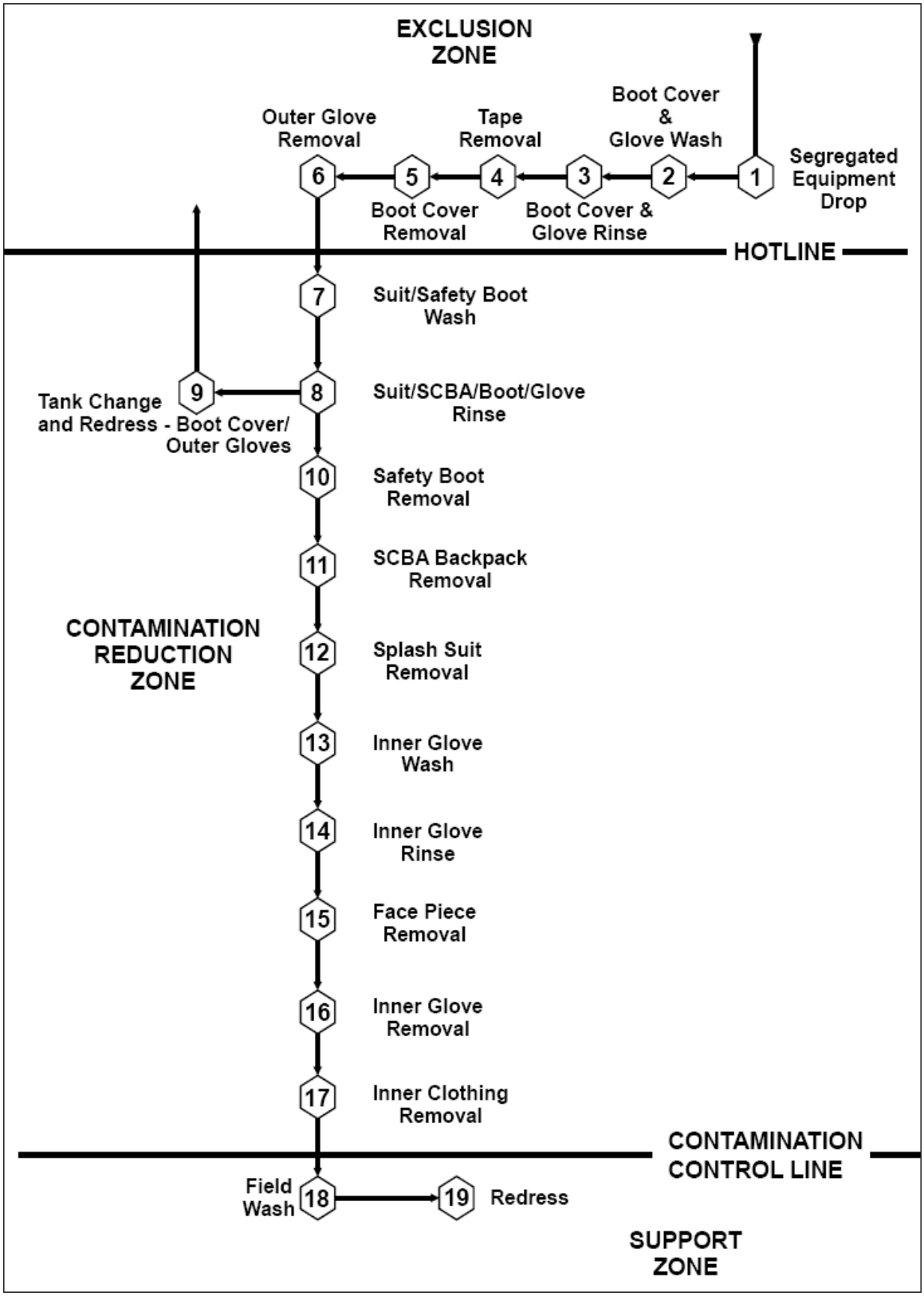

Figure 3. Maximum Decontamination Layout, Level C Protection

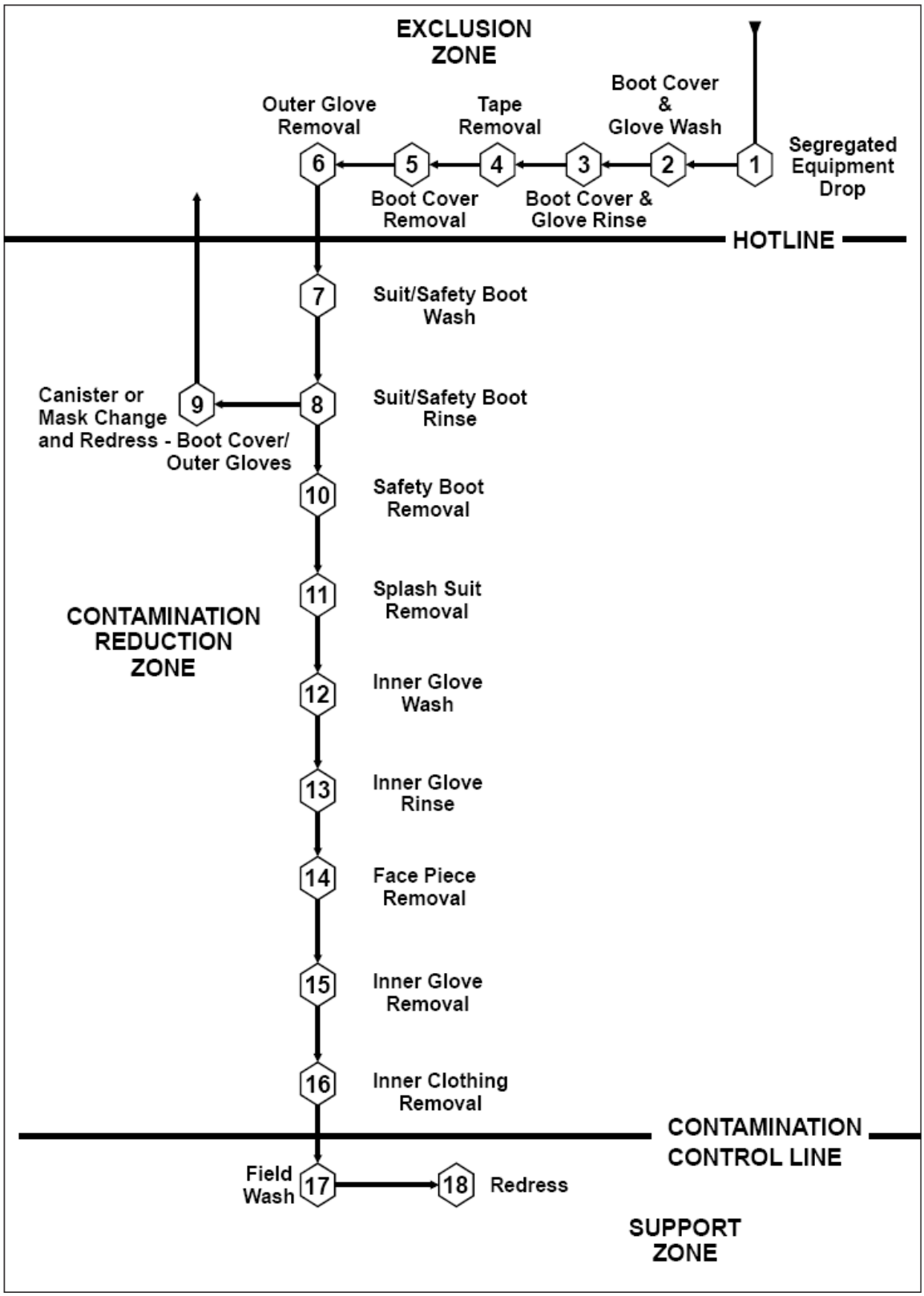

Figure 4. Minimum Decontamination Layout, Levels A and B Protection

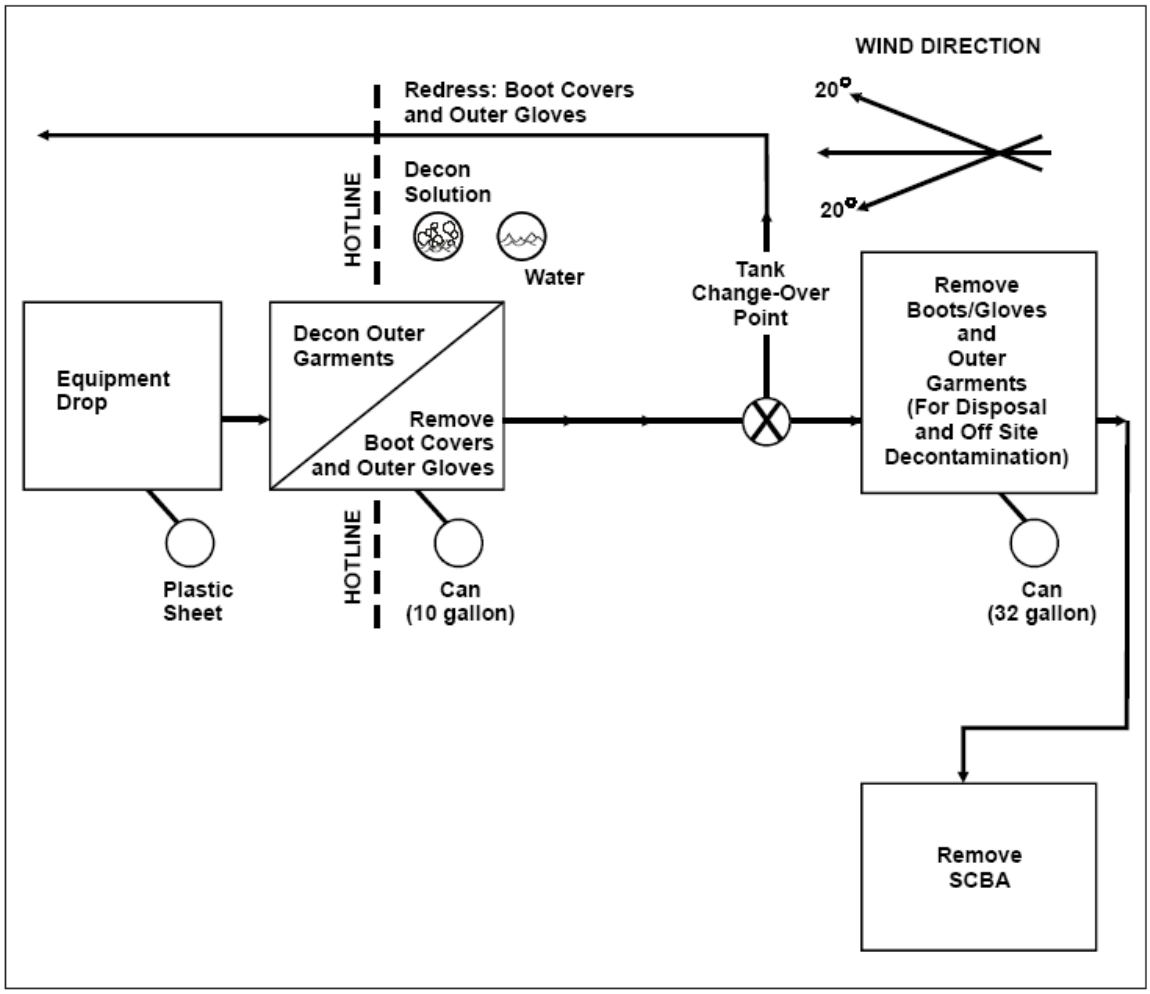

Figure 5. Minimum Decontamination Layout, Level C Protection

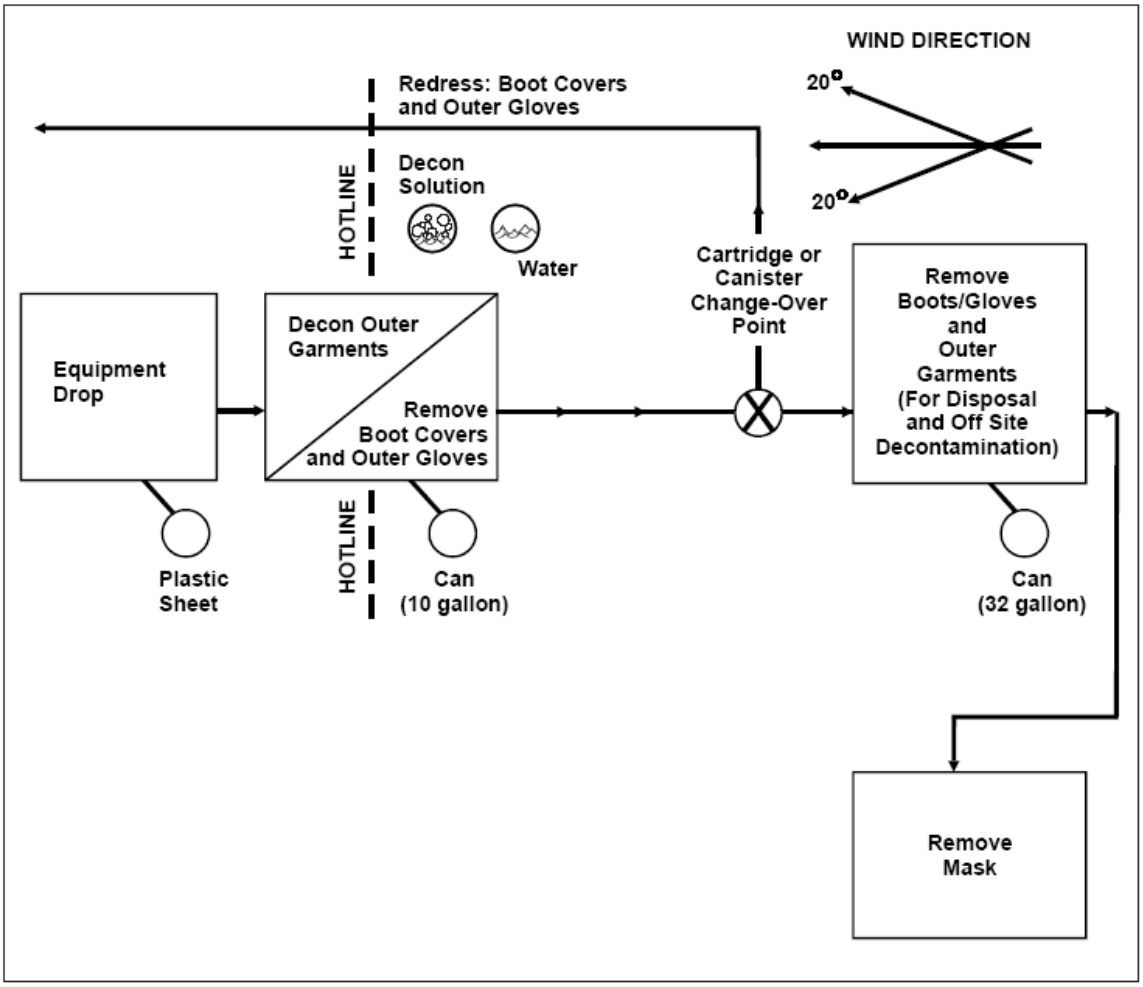

APPENDIX K

Decontamination Solutions for Specific Chemical and Biological Hazards

Hazard Type	Agent	Decontamination of PPE/Skin[a]
Nerve Agents	GA (tabun)	Decon outer PPE with a dilute household bleach solution.[b] *Note: Liquid agent GA reaction with high-pH solutions, such as undiluted bleach, may produce toxic intermediate products (e.g., cyanide gas).* Use warm soapy water instead of dilute bleach for decon of bare skin.
	GB (sarin)	
	GD (soman)	
	GF (cyclosarin)	
	VX	
Blister Agents	H/HD/HT (sulfur mustard)	
Biological Agents	Anthrax	Decon outer PPE with very dilute 0.05% bleach solution. Decon skin with warm soapy water (0.05% bleach solution may irritate skin) for 10-15 minutes.
	Botulinum toxin	Contaminated PPE, clothing, equipment, or surfaces can be decontaminated with a dilute household bleach solution.[b] For skin decon, use warm soapy water, taking care not to abrade the skin. *Note: This information is for naturally occurring botulinum toxin. If weaponized, this information could change.*
	Brucella	Contaminated PPE, clothing, equipment, or surfaces can be decontaminated with a dilute household bleach solution.[b] For skin decon, use warm soapy water, taking care not to abrade the skin. *Note: This information is for a weaponized* Brucella *attack.*
	Argentine hemorrhagic fever	Contaminated PPE, clothing, equipment, or surfaces can be decontaminated with a dilute household bleach solution.[b] For skin decon, use warm soapy water, taking care not to abrade the skin.
	Bolivian hemorrhagic fever	
	Brazilian hemorrhagic fever	
	Bunyaviridae–Rift Valley fever	
	Ebola and Marburg hemorrhagic fevers	
	Glanders and melioidosis	
	Lassa fever	
	Lymphocytic choriomeningitis virus	
	Dengue hemorrhagic fever	Decon outer PPE with very dilute 0.05% bleach solution. Decon skin with warm soapy water (0.05% bleach solution may also be used but this could irritate the skin).
	Tick-borne encephalitis	
	Plague Smallpox Tularemia	Decon outer PPE with dilute (0.05%) bleach solution. Decon skin with warm soapy water (0.05% bleach may irritate skin) for 10-15 minutes. A decon shower may be recommended as the final step in personal decontamination.

[a] Any fluids used for decontamination should be disposed of properly and not reused.
[b] To create a dilute bleach solution (0.5% sodium hypochlorite solution), combine water with household bleach (5% sodium hypochlorite) by adding 1 part bleach to 9 parts water.

Note: PPE might be required when using decon products (e.g., use of bleach could result in release of chlorine gas).